

The new G-Class

Effective from July 2026 Production.

Mercedes-Benz













Some of the model features, optional extras and colours shown may not be available, or may only be available in a different specification.



Some of the model features, optional extras and colours shown may not be available, or may only be available in a different specification.













Some of the model features, optional extras and colours shown may not be available, or may only be available in a different specification.



Some of the model features, optional extras and colours shown may not be available, or may only be available in a different specification.



Some of the model features, optional extras and colours shown may not be available, or may only be available in a different specification.



G-Class

Technology

More is impossible

In off-road terrain the G-Class remains an unrivalled legend. It masters the key off-road disciplines effortlessly and with impressive results, e.g. gradeability, ground clearance, wading depth, angle of approach/departure and lateral slopes.

OFFROAD COCKPIT

Off the beaten track, the new OFFROAD COCKPIT provides an overview of the relevant data for off-road driving in both the driver and media displays, as well as functions to support off-road driving.

Rear axle

Extremely robust rigid axle with high degree of axial twist supports the chassis and the body. The rigid axle is connected to the ladder frame by means of two lower and two upper trailing arms as well as a panhard rod, which prevents sideways movements in the suspension in terms of between the vehicle body and rigid rear axle, and ensures the necessary traction even in the most difficult terrain and based on the road surface.

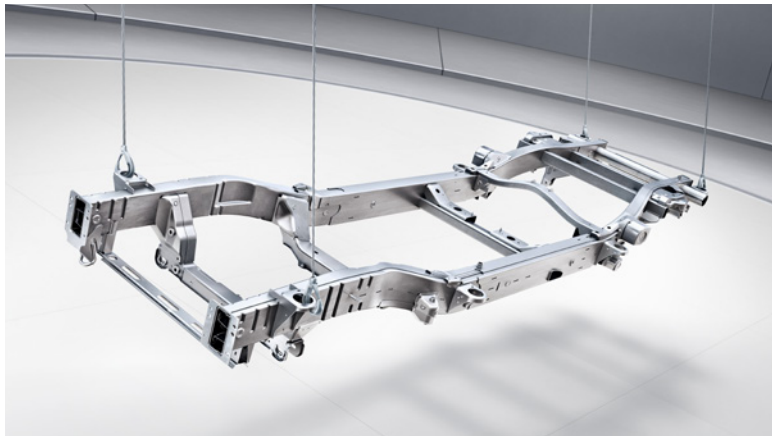

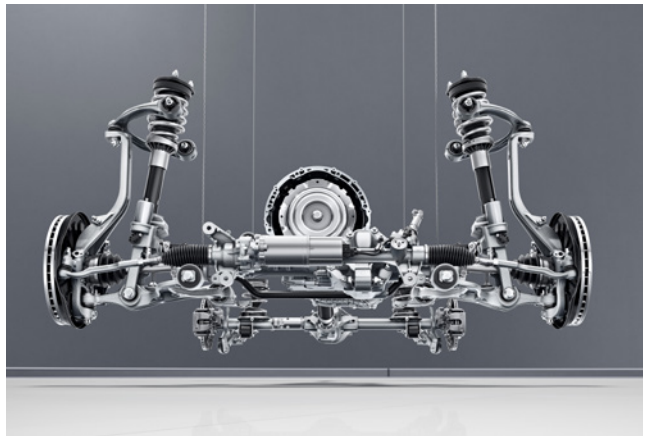

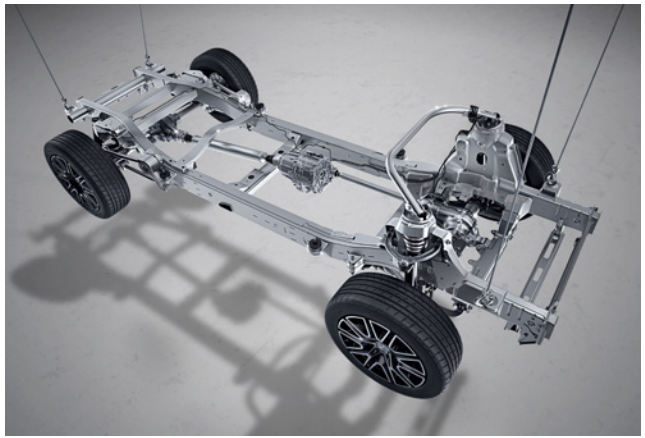

Off-road performance

- Angle of approach/departure: 30.9°/29.9°
- Breakover angle: 25.7°
- Climbing ability: up to 100%
- Ground clearance: 24.1 cm
- Maximum fording depth: 70 cm
- Side slope angle: up to 70%

Front axle

It is executed as a double-wishbone axle with independent suspension and spring strut and ensures the necessary traction in even the most difficult off-road terrain. The new independent suspension enables more precise wheel location, thus in turn enabling better control of the G-Class.

Body

The ladder frame has formed the basis for the G-Class since the very beginning. The ladder frame consists of sheet steel of up to 3.4 mm in thickness with closed side members and cross members. This design is considerably more robust and better suited to off-road use than a self-supporting body.

Inside, luxury meets adventure

The G-Class combines timeless design with advanced technology, featuring the MBUX infotainment system for intuitive control and smartphone integration for seamless connectivity. Additionally, its THERMOTRONIC 3-zone automatic climate control ensures a personalised feel-good atmosphere on board.

MBUX (Mercedes-Benz User Experience)

The MBUX (Mercedes-Benz User Experience) infotainment system with 12.3-inch driver and media displays including touch control is in all model variants for the first time. Smartphone integration connects the mobile phone wirelessly to the MBUX multimedia system via Android Auto Wireless® or Apple CarPlay®.







Smartphone integration[1]

Smartphone integration[1] merges the mobile phone with the infotainment system via Apple CarPlay® and Android Auto™. This gives you convenient access to the most important applications on your smartphone. You can also use apps from third-party service providers such as Spotify quickly and easily.

THERMOTRONIC automatic climate control

The THERMOTRONIC automatic climate control system with three climate zones and three climate styles provide an individual feel-good atmosphere on board. The driver and front passenger are able to set the temperature, air distribution and climate style to suit their personal needs. The third climate zone is in the rear – with separately adjustable temperature and airflow.

[1]Compatible mobile phone required

Cares for what matters Driving Assistance package[1]

The Driving Assistance package[1] contains a range of highly intelligent features to help you stay safe on the road – by making the drive more effortless, by warning of danger, and by taking steps to protect you in an emergency. The Driving Assistance package is standard on all G-Class models.

- **Active Brake Assist with turn-off function** with vehicle, pedestrian and bicycle detection incl. collision warning with autonomous emergency braking function
- **Active Distance Assist DISTRONIC** helps maintain the desired distance from the vehicle in front
- **Active Emergency Stop Assist:** immediate emergency braking if evasion is impossible
- **Active Lane Keeping Assist** with visual and audible warning when a lane change is requested and a vehicle is detected in the blind spot
- **Active Speed Limit Assist** ensures detected speed limits are automatically adopted as the set speed for Active Distance Assist DISTRONIC
- **Active Steering Assist:** targeted steering intervention to prevent unintentional drifting out of lane with Active Emergency Stop Assist with SOS function and emergency lane function
- **Blind Spot Assist** can warn the driver of vehicles in the blind spot during a lane change
- **Extended restart on motorways**
- **PRE-SAFE® Impulse side[2]**
- **Route-based speed adjustment:** adaption of speed before curves, roundabouts and junctions
- **Traffic Sign Assist** recognises speed limits, overtaking bans and entry restrictions using camera and map data

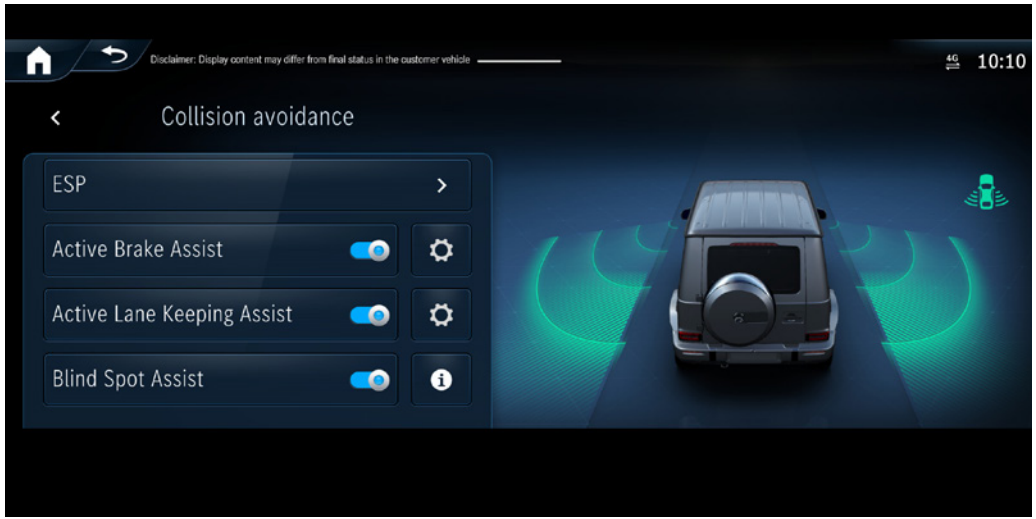

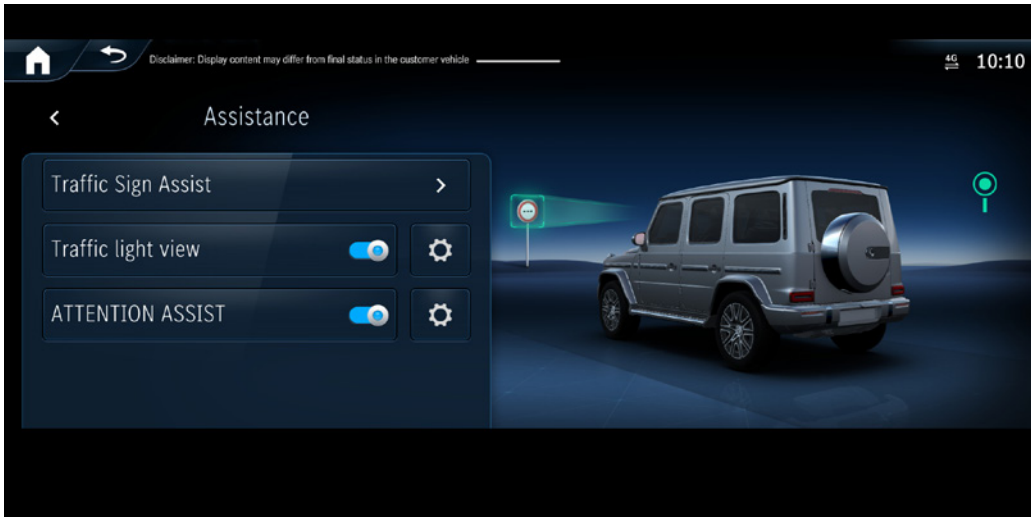

[1]Our driver assistance and safety systems are aids and do not relieve you of your responsibility as the driver. Please take note of the information in the Owner's Manual and the system limits which are described therein

[2]Only available when MANUFAKTUR package (code DPM) is selected (standard on Mercedes-AMG G 63 MANUFAKTUR Edition and Mercedes-AMG G 63 Magno Edition)

Digital Extras Stay connected any time, anywhere

Digital Extras are a range of innovative online services designed to enhance your Mercedes-Benz experience. Accessible via mobile, tablet or PC, Digital Extras let you enjoy the highest standards of care and support, in a way that integrates seamlessly with your busy lifestyle.

Safety and Service – Digital Extras help to keep you and your car safe

Check your car's oil level, tyre pressure and fuel from your phone so you'll be ready for every journey.





Live Traffic Information, Parked Vehicle Locator and much more

Forgot where you've parked? Parked Vehicle Locator[1] will show you exactly where your car is as long as you're in a 1-mile radius of where you parked. Real-time traffic data and dynamic route with shorter journey times.

For more information speak to your local Mercedes-Benz Agent or visit the Mercedes-Benz store at shop.mercedes-benz.com/en-gb/connect

Comfort – connect to your car anytime, anywhere

Forgot to lock your car? With Remote Car Lock[2] you will receive a notification on your smartphone to let you know. With one tap, you can lock and unlock your vehicle so you never have to worry.

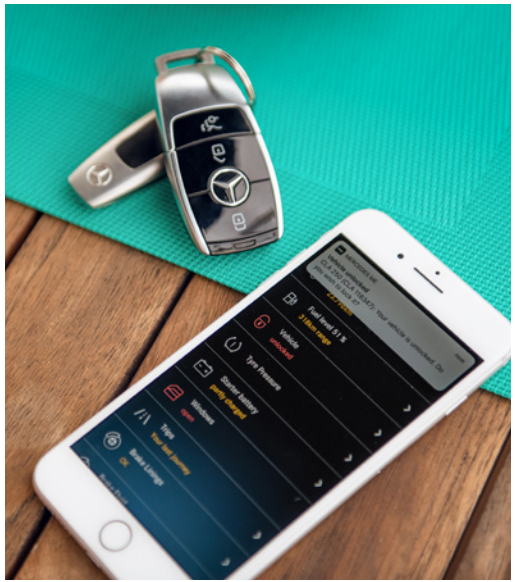

The connection of the communication module to the mobile phone network including the emergency call system depends on the respective network coverage and availability of network providers

[1]Available on all models with the Vehicle Monitoring package. This option may vary between standard and additional cost dependent on the model [2]Part of the Vehicle Status package. This option may vary between standard and additional cost dependent on the model Images shown are for illustration purposes only

G-Class

EQ Technology



The all-new electric G-Class The G 580 with EQ Technology

Introducing the groundbreaking G 580 with EQ Technology AMG Line Premium Plus, a marvel of electric innovation redefining the iconic G-Class experience. Harnessing cutting-edge EQ technology, it propels the legendary G-Wagon into a new era of sustainable performance and electrifying power.

G 580 with EQ Technology AMG Line Premium Plus
Battery electric vehicle, 587 hp/432 kW
Electric range 290–291 miles – WLTP

OTR from **£154,870**[1]



Standard equipment

- Charging cable – Mode 3 cable (5 metres, straight) for wallbox and public charging stations
- Charging socket
- Charging system – rated at 11 kW AC
- Charging system – rated at 200 kW DC
- ELECTRIC DYNAMIC SELECT with five transmission modes: 'Comfort', 'Sport', 'Individual', 'Trail', 'ROCK' and five recuperation levels 'Dauto', 'D+', 'D', 'D-', 'D - -'
- G-ROAR – a unique sound experience inspired by the sound of a V8 engine
- G STEERING[2] – can significantly reduce the turning circle of the all-new electric G-Class when driving off-road or on loose surfaces
- G TURN[2] – drivers can turn the all-new electric G-Class almost on the spot. The vehicle performs up to two complete vehicle turns in the desired direction on unpaved or loose surfaces
- Off-road crawling[3]
- Remote and Charging Services Plus[4]
- Suspension with selective passive damping system

Technical details

Equivalent All-Electric Range (EAER)[5]	290–291 miles
Charging time	
DC charging station (200 kW) 10–80%[6]	32 mins
Wallbox (11 kW AC), 0–100%[7]	12 hrs
Electric energy consumption, combined[5,8]	287 Wh/km
Battery type (capacity)	Lithium-ion (117 kWh)
Capacity on-board charger	11 kW AC, 200 kW DC

Attention

°C Please be aware that external factors such as weather, gradient and ambient temperature amongst others can significantly impact range.

Please also note that internal factors such as driving style and climate control settings etc. can also significantly impact range.

Using the pre-entry climate control[2] when plugged into a charge point will ensure the perfect ambience and ensure that your car is just how you like it, as well as making sure that your battery isn't used unnecessarily to heat/cool the vehicle (maximising range).

[1]The recommended on-the-road price includes the Road Fund Licence applicable to the standard model plus delivery charge (£780.00 incl. VAT), new vehicle registration fee (£55.00) and number plates (£25.00 incl. VAT). VAT is calculated at the standard rate of 20%. Some of the model features, optional extras and colours shown may not be available, or may only be available in a different specification, or at a different price [2]It is not permissible to use G-TURN and G-STEERING on any public roads and such use is in no way authorised, promoted or condoned. Use G-TURN and G-STEERING only on loose or soft surfaces, e.g. gravel or snow, with relevant land permission [3]The intelligent off-road crawl function is an aid only. The driver is responsible at all times for maintaining a sufficient distance from the vehicle in front or from any obstacles [4]The connection of the communication module to the mobile phone network including the emergency call system depends on the respective network coverage and availability of network providers [5]Figures shown are for comparability purposes; only compare with other cars tested to the same technical procedures. Figures may not reflect real life driving results, which will depend upon a number of factors including the starting charge of the battery, factory-fitted options, accessories fitted (post registration), variations in weather, driving styles and vehicle load. Further information about the test used to establish range, power consumption and CO_2 figures can be found at http://www.mercedes-benz.co.uk/WLTP [6]Specified voltage and current values refer to network infrastructure and can be limited by the vehicle. Times are from 10-80% charge using public rapid charging at 200 kW [7]Specified voltage and current values refer to network infrastructure and can be limited by the vehicle. Times are from 0-100% charge using a wallbox (three-phase) or standard socket (single-phase) [8]Specified voltage and current values refer to network infrastructure and can be limited by the vehicle

MB.CHARGE Public[1] One registration, one contract, one billing

MB.CHARGE Public[1] provides access to a multitude of public charging stations located in shopping centres, hotels or at motorway services. A smartphone app as well as the vehicle's navigation system show the precise location, current availability and price at the selected charging station.

MB.CHARGE Public – Private customer

Tens of thousands charging stations in the UK

Growing network of charging providers includes bp pulse the largest charging network in the UK.



Access to fast-charging stations

Enables customers to get access to charging stations of different providers with:

- Mercedes-Benz app
- RFID card
- Vehicle Head unit

Green charging

All charging using MB.CHARGE Public,[1] will be retrospectively 'greened' by Mercedes-Benz.

Transparent and easy billing

One invoice charging processes for payment.

Easy access

Charging stations are displayed in Mercedes-Benz app and in MBUX multimedia system.

No fees

Enjoy free access to MB.CHARGE Public's convenient, reliable, and user-friendly charging network.

MB.CHARGE Public – Business customer

Key features

- All MB.CHARGE Public Private customer features[2]
- Charging fleet portal
- Company payment and billing
- Flexible prices per kWh



[1]The connection of the communication module to the mobile phone network including the emergency call system depends on the respective network coverage and availability of network providers

[2]Excluding MB.CHARGE Public Private customer tariffs

MB.CHARGE Public[1] Private customer tariffs[2]

Charge smarter with our Preferred Partner Network and access exclusive savings with lower rates on Tariff L and M compared to standard tariffs. Owners of the new G 580 with EQ Technology will be entitled to the MB.CHARGE Public[1] tariff L free of charge for the duration of 3 months.[2]

Tariff L[2]

Recommended for 'frequent drivers'

Owners of a new all-electric model are entitled to the tariff L free of charge for 3 months, benefitting from the best exclusive savings of our tariffs as well as all MB.CHARGE Public[1] features. This tariff is recommended for frequent and long-distance drivers.

Consisting of:

- All MB.CHARGE Public[1] features
- Fixed prices per kWh
  - IONITY: £0.55/kWh
  - bp pulse, Be.EV and Smart Charge: £0.59/kWh + £0.17/min after 90 mins
- 15% discount across the rest of the MB.CHARGE Network

Free of charge for the duration of 3 months.[2] Thereafter: £9.90/month

Tariff M[2]

Recommended for 'regular drivers'

Should you wish to downgrade your tariff package after 3 months, tariff M offers discounted pricing across our Preferred Partner Network, recommended for regular drivers.

Consisting of:

- All MB.CHARGE Public[1] features
- Fixed prices per kWh
  - IONITY: £0.62/kWh
  - bp pulse, Be.EV and Smart Charge: £0.65/kWh + £0.17/min after 90 mins
- 10% discount across the rest of the MB.CHARGE Network

£4.90/month

Tariff S[2]

Recommended for 'casual drivers'

Should you wish to downgrade your tariff package after 3 months, tariff S offers all MB.CHARGE Public[1] features with flexible pay-per-use pricing across the entire network. This tariff is recommended for casual drivers.

Consisting of:

- All MB.CHARGE Public[1] features
- Flexible prices per kWh depending on provider

£0/month



[1]The connection of the communication module to the mobile phone network including the emergency call system depends on the respective network coverage and availability of network providers [2]This offer is exclusively for consumers. The distinction between consumer and business is determined by the type of vehicle linkage (private profile or company profile)
Price information is not guaranteed and is subject to change. Please be aware that this tariff will automatically renew after the 3 month promotion period - for definitive pricing information or should you not wish to continue with the tariff, your cancellation rights and current pricing can be found https://eu.charge.mercedes-benz.com/web/en/mb-gb/tariffs

Home charging with Pod Simple, convenient, fast charging

Mercedes-Benz plug-in vehicle customers with off-street parking can benefit from the convenience and speed of charging at home by installing a Pod Point home charger.

Home charging with Pod from £899* inc. VAT and standard installation[1] or £0 Pod Drive sign-up fee

Pod Drive

Pod Drive is a new all-inclusive subscription service to spread the cost of installing a homecharger. £0 sign-up fee for Mercedes-Benz customers (usually £99) and £40 a month for 3 years. The service includes additional benefits such as 7,500 miles a year in cashback and enhanced warranty cover.

Warning!

If you are planning to charge your Mercedes-Benz plug-in electric vehicle using a 3-pin domestic plug socket you must get a qualified electrician to inspect and sign off the socket to confirm it is safe and suitable to charge your vehicle. Do not use an electric vehicle 3-pin charge cable with an extension cord.

Key benefits of Pod:

Pod is one of the leading provider of EV charging in the UK with over 250,000 home chargepoints installed.

Auto Power Balancing lets you adjust your charge so that your electrical supply doesn't get overloaded when your home is using a lot of energy.

Built-in earthing protection removes the needs for expensive earth rods.

Buy a Pod Point for a discounted cost of £899 for an untethered and £949 for a tethered. Or, sign up for Pod Drive with a £0 sign-up fee.

The Pod public network consists of over 9,200 charging bays across the UK.

5 year warranty as standard, free of charge.

The standard installation package includes up 15 m of external cabling.



OZEV Grant:

You may be entitled to claim an OZEV grant towards the cost of your home charger.[2] To check your eligibility, simply contact your local Mercedes-Benz Agent.

Questions?

Need help with home charging solutions? Simply contact your nearest Mercedes-Benz Agent – they'll be happy to submit an enquiry to your preferred charging partner on your behalf.

*Price excludes £500 OZEV EVHS Grant. Price correct at time of publication, subject to change [1]Full terms and conditions of home charging with Pod can be found **here** [2]The home charger £500 Grant (including VAT) is only available to customers who meet the criteria of the Office for Zero Emission Vehicles (OZEV). Full details and eligibility criteria for the OZEV EVHS Grant can be found **here**

G-Class Model lines overview



PROFESSIONAL Line ››



AMG Line Premium Plus ››

PROFESSIONAL Line



No-cost option paint colour shown: emerald green metallic (code 989)

Built for the toughest work, styled for the wild.
The new PROFESSIONAL Line is a purpose-built specification defined by its distinctive PROFESSIONAL Line exterior, night package, front and rear mud flaps, and a robust spare wheel holder. With confident traction from all-terrain tyres, clear visibility from LED High Performance headlamps with protective grilles, and a strong stance on 18" 5-spoke light-alloy wheels, it's engineered to look ready and stay ready for whatever the day demands.

PROFESSIONAL Line **OTR from £142,635[1]**

[1]The recommended on-the-road price includes the Road Fund Licence applicable to the standard model plus delivery charge (£780.00 incl. VAT), new vehicle registration fee (£55.00) and number plates (£25.00 incl. VAT). VAT is calculated at the standard rate of 20%. Some of the model features, optional extras and colours shown may not be available, or may only be available in a different specification, or at a different price

PROFESSIONAL Line Standard equipment highlights



No-cost option paint colour shown: emerald green metallic (code 989)



No-cost option paint colour shown: emerald green metallic (code 989)

Exterior
18" Alloy wheels – 5-spoke design painted in matt black (code RK7)
All-terrain tyres with front and rear 265/60 R18 tyres
Bodystyling – PROFESSIONAL Line
Electric sunroof – sliding with one-touch opening
Exterior mirror housings in obsidian black
LED High Performance headlamps with PROFESSIONAL protective grilles for headlamps

Night package
PROFESSIONAL mud flaps (front and rear)
PROFESSIONAL spare wheel holder
Radiator grille including louvres and surround of Mercedes star painted in obsidian black
Underguard in black

Engine, Transmission and Suspension
4MATIC Permanent four-wheel drive
DYNAMIC SELECT with seven transmission modes
Suspension with selective passive damping system







Interior

Ambient lighting – 64 colours	Seats – electrically adjustable (front)
MICROCUT microfibre roof liner in black	Seats – heated (front and rear)
Dashboard in leather	Steering wheel – multifunction steering wheel in nappa leather
Ionisation of interior air including fine-particle activated charcoal filter system	Stowage Space package
Memory package	THERMOTRONIC automatic climate control

Communications, Safety and Assistance Systems

Burmester® 3D surround sound system	MBUX augmented reality navigation
DAB digital radio tuner	MBUX infotainment system
Dashcam	Parking package with 360° camera
Driving Assistance package[1]	Sound personalisation
GUARD 360° Vehicle protection Plus[2]	Widescreen cockpit with dual bonded 12.3-inch widescreen displays
KEYLESS GO	

Trim and Upholstery

Trim – MANUFAKTUR black flamed open-pore ash wood	Upholstery – Nappa leather in black





[1]Our driver assistance and safety systems are aids and do not relieve you of your responsibility as the driver. Please take note of the information in the Owner's Manual and the system limits which are described therein

[2]The connection of the communication module to the mobile phone network including the emergency call system depends on the respective network coverage and availability of network providers

AMG Line Premium Plus



The ultimate fusion of luxury and performance

Introducing the AMG Line Premium Plus, boasting 20" AMG alloy wheels, alongside 4MATIC Permanent four-wheel drive, ensuring exceptional control. Enjoy enhanced visibility with precision-guided MULTIBEAM LED headlamps, and effortless navigation through MBUX augmented reality on dual bonded 12.3-inch widescreen displays, accompanied by sumptuous nappa leather upholstery.

AMG Line Premium Plus **OTR from £142,635[1]**

[1]The recommended on-the-road price includes the Road Fund Licence applicable to the standard model plus delivery charge (£780.00 incl. VAT), new vehicle registration fee (£55.00) and number plates (£25.00 incl. VAT). VAT is calculated at the standard rate of 20%. Some of the model features, optional extras and colours shown may not be available, or may only be available in a different specification, or at a different price

AMG Line Premium Plus Standard equipment highlights



Option shown: sodalite blue metallic (code 842)



Option shown: sodalite blue metallic (code 842)

Engine, Transmission and Suspension

- 4MATIC Permanent four-wheel drive
- DYNAMIC SELECT with seven transmission modes (G 450 d)
- ELECTRIC DYNAMIC SELECT with five drive programmes (G 580 with EQ Technology)
- Suspension with selective passive damping system



Wheel shown: code RN8 (G 580 with EQ Technology only)



Wheel shown: code R16 (G 450 d)

Exterior

- 20" AMG alloy wheels – 5-twin-spoke design, painted high-gloss black with a high-sheen finish (code R16) (G 450 d)
- 20" AMG alloy wheels – 10-spoke design, aerodynamically optimised, painted high-gloss black (code RN8) (G 580 with EQ Technology)
- Brake calipers with 'Mercedes-Benz' lettering
- Bumper insert in stainless steel
- Exterior protective strip with trim insert in brushed aluminium
- Heated windscreen
- Mirror housings in vehicle colour
- MULTIBEAM LED headlamps with Adaptive Highbeam Assist Plus
- Privacy glass – dark glass from B-pillar backwards
- Running boards
- Spare wheel cover in vehicle colour with spare wheel ring in stainless steel
- Summer tyres
- Trailer coupling with ESP® trailer stabilisation (G 450 d)
- Underguard in silver

G 580 with EQ Technology highlights

- Charging cable for wallbox and public charging station 5 m, straight
- Charging system – rated at 11kW AC and 200kW DC
- G-ROAR – a unique sound experience inspired by the sound of a V8 engine
- G STEERING[1] – can significantly reduce the turning circle of the all-new electric G-Class when driving off-road or on loose surfaces
- G TURN[1] – drivers can turn the all-new electric G-Class almost on the spot. The vehicle performs up to two complete vehicle turns in the desired direction on unpaved or loose surfaces
- Off-road crawling[2] – provides drivers with additional support when driving off-road by maintaining a pre-set speed

[1]It is not permissible to use G-TURN and G-STEERING on any public roads and such use is in no way authorised, promoted or condoned. Use G-TURN and G-STEERING only on loose or soft surfaces, e.g. gravel or snow, with relevant land permission front or from any obstacles

[2]The intelligent off-road crawl function is an aid only. The driver is responsible at all times for maintaining a sufficient distance from the vehicle in



Interior

- Ambient lighting – 64 colours
- MICROCUT microfibre roof liner in black
- Dashboard in leather
- Floor mats with 'AMG' lettering
- Ionisation of interior air including fine-particle activated charcoal filter system
- Memory package
- Seats – electrically adjustable (front)
- Seats – heated (front and rear)
- Stainless steel door sill panels, set of four, illuminated, with 'Mercedes-Benz' lettering at the front
- Steering wheel – multifunction sports steering wheel in nappa leather, heated
- Stowage Space package
- THERMOTRONIC automatic climate control

Communications, Safety and Assistance Systems

- Burmester® 3D surround sound system
- DAB digital radio tuner
- Dashcam
- Driving Assistance package[1]
- GUARD 360° Vehicle protection Plus[2]
- KEYLESS GO
- MBUX augmented reality navigation
- MBUX infotainment system
- Parking package with 360° camera
- Sound personalisation
- Widescreen cockpit with dual bonded 12.3-inch widescreen displays
- Wireless charging (front)



Trim and Upholstery

Trim – MANUFAKTUR black flamed open-pore ash wood



Upholstery – Nappa leather in black



[1]Our driver assistance and safety systems are aids and do not relieve you of your responsibility as the driver. Please take note of the information in the Owner's Manual and the system limits which are described therein

[2]The connection of the communication module to the mobile phone network including the emergency call system depends on the respective network coverage and availability of network providers

Model prices

Model line	Engine	Transmission	CO_2 WLTP[1,*]	Basic RRP excl. VAT (£)	Total RRP incl. VAT (£)	Road Fund Licence (£)[2] WLTP	Rec. OTR price (£)[3] WLTP	P11D value (£)	BiK tax rate 2026/27 (%)[2]
PROFESSIONAL Line									
G 450 d	Diesel – 2,989 cc, 6-cylinder, 367 hp/270 kW Mild hybrid drive – 20 hp/15 kW	9G-TRONIC automatic	242	114,104.17	136,925.00	4,850.00	**142,635.00**	137,730.00	37
AMG Line Premium Plus									
G 450 d	Diesel – 2,989cc, 6-cylinder, 367 hp/270 kW Mild hybrid drive – 20 hp/15 kW	9G-TRONIC automatic	234	114,104.17	136,925.00	4,850.00	**142,635.00**	137,730.00	37
G 580 with EQ Technology	Battery electric vehicle, 587 hp/432 kW Electric range up to 291 miles – WLTP[1]	Single-speed automatic	0	128,333.33	154,000.00	10.00	**154,870.00**	154,805.00	4

[1]The indicated values were determined according to the prescribed measurement method - Worldwide Harmonised Light Vehicle Test Procedure (WLTP). Figures shown may include options which are not available in the UK. *Figures shown are for comparability purposes; only compare with other cars tested to the same technical procedures. Figures may not reflect real life driving results, which will depend upon a number of factors including factory-fitted options, accessories fitted (post registration), variations in weather, driving styles and vehicle load. Further information about the test used to establish fuel consumption and CO_2 figures can be found at http://www.mercedes-benz.co.uk/WLTP [2]A different first year rate of Vehicle Excise Duty (Road Fund Licence) applies for new cars. Please refer to page 93 for the relevant rate for the second and subsequent years [3]The recommended on-the-road price includes the Road Fund Licence applicable to the standard model plus delivery charge (£780.00 incl. VAT), new vehicle registration fee (£55.00) and number plates (£25.00 incl. VAT). VAT is calculated at the standard rate of 20%. Some of the model features, optional extras and colours shown may not be available, or may only be available in a different specification, or at a different price



G-Class

Mercedes-AMG

Mercedes-AMG G-Class Model lines overview

Mercedes-AMG G 63 ››



Mercedes-AMG G 63 Carbon Edition ››



Mercedes-AMG G 63 MANUFAKTUR Edition ››



Mercedes-AMG G 63 Magno Edition ››



Mercedes-AMG G 63 Standard equipment highlights



Option shown: iridium silver metallic (code 775)



Option shown: iridium silver metallic (code 775)

Engine, Transmission and Suspension

- AMG ACTIVE RIDE CONTROL with active hydraulic roll stabilisation
- AMG SPEEDSHIFT PLUS 9G-TRONIC

OTR from **£190,975**[1]

[1]The recommended on-the-road price includes the Road Fund Licence applicable to the standard model plus delivery charge (£780.00 incl. VAT), new vehicle registration fee (£55.00) and number plates (£25.00 incl. VAT). VAT is calculated at the standard rate of 20%. Some of the model features, optional extras and colours shown may not be available, or may only be available in a different specification, or at a different price

Exterior

- 22" AMG forged wheels – cross-spoke design, painted matt black with a high-sheen rim flange (code RG4)
- AMG bodystyling with exclusive Mercedes-AMG G 63 front aprons with cooling air intakes and flared wheel arches in vehicle colour
- AMG red brake callipers
- AMG-specific radiator grille
- Bumper insert in stainless steel
- Exterior protective strip with trim insert in black
- Electric sunroof – sliding, with one-touch opening
- Heated windscreen
- MULTIBEAM LED headlamps with Adaptive Highbeam Assist Plus
- Privacy glass – dark glass from B-pillar backwards
- Running boards
- Spare wheel cover in vehicle colour with spare wheel ring in stainless steel
- Summer tyres
- Trailer coupling ESP® trailer stabilisation
- Underguard in silver





Communications, Safety and Assistance Systems

- Widescreen cockpit with dual bonded 12.3-inch widescreen display
- Burmester® 3D surround sound system
- MBUX multimedia system
- DAB digital radio tuner
- Driving Assistance package[1]
- Parking package with 360° camera
- Smartphone integration[2] including Apple CarPlay® and Android Auto™



Interior

- Ambient lighting – choice of 64 colour settings
- AMG floor mats with 'AMG' lettering
- AMG Performance steering wheel in nappa leather, heated
- Illuminated AMG door sill panels with 'AMG' lettering at front and rear

Trim and Upholstery

Trim – metal structure trim element



Upholstery – AMG nappa leather in black



[1]Our driver assistance and safety systems are aids and do not relieve you of your responsibility as the driver. Please take note of the information in the Owner's Manual and the system limits which are described therein [2]Compatible mobile phone required

Mercedes-AMG G 63 Carbon Edition Standard equipment highlights



Option shown: MANUFAKTUR monza grey magno (code 054)



Option shown: MANUFAKTUR monza grey magno (code 054)

OTR from **£200,975**[1]

In addition to/replacement of Mercedes-AMG G 63:

Exterior

- 22" AMG forged wheels – cross-spoke design, painted matt black with a high-sheen rim flange (code RG4)
- AMG Exterior Carbon-Fibre package
- AMG mirror cover in carbon-fibre design
- Bumper insert in carbon fibre
- Front simulated underguard in carbon fibre
- Spare wheel cover in carbon fibre with spare wheel ring painted in obsidian black
- Summer tyres



[1]The recommended on-the-road price includes the Road Fund Licence applicable to the standard model plus delivery charge (£780.00 incl. VAT), new vehicle registration fee (£55.00) and number plates (£25.00 incl. VAT). VAT is calculated at the standard rate of 20%. Some of the model features, optional extras and colours shown may not be available, or may only be available in a different specification, or at a different price



Interior

AMG Performance steering wheel in carbon-fibre design/MICROCUT microfibre, heated

Trim and Upholstery

Trim – AMG carbon fibre

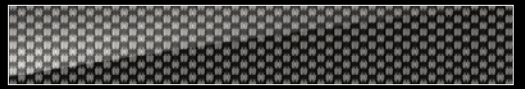

Upholstery – AMG nappa leather in black

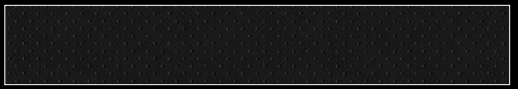

Mercedes-AMG G 63 MANUFAKTUR Edition Standard equipment highlights



No-cost option shown: MANUFAKTUR south seas blue metallic (code 162)



No-cost option shown: MANUFAKTUR south seas blue metallic (code 162)

OTR from **£207,475**[1]

[1]The recommended on-the-road price includes the Road Fund Licence applicable to the standard model plus delivery charge (£780.00 incl. VAT), new vehicle registration fee (£55.00) and number plates (£25.00 incl. VAT). VAT is calculated at the standard rate of 20%. Some of the model features, optional extras and colours shown may not be available, or may only be available in a different specification, or at a different price

In addition to/replacement of Mercedes-AMG G 63 Carbon Edition:

Exterior
22" AMG forged wheels – cross-spoke design, painted matt black with a high-sheen rim flange (code RG4)
Bumper insert in stainless steel
Exterior mirror housings in vehicle colour
Exterior protective strip with trim insert in black
MANUFAKTUR Logo package
MANUFAKTUR logo projector in exterior mirror
MANUFAKTUR paint
MANUFAKTUR spare wheel cover and spare wheel ring painted in vehicle colour
Summer tyres







MANUFAKTUR grab handles in leather

Interior

- AMG Performance steering wheel in nappa leather, heated
- Dashboard in nappa leather
- ENERGIZING package Plus
- MANUFAKTUR grab handles in leather
- MANUFAKTUR package
- Seats – ventilated, multicontour seats (front)

Trim and Upholstery

Trim – MANUFAKTUR black flamed open-pore ash wood



Upholstery – AMG Exclusive nappa leather in black



Mercedes-AMG G 63 Magno Edition Standard equipment highlights



Option shown: hyacinth red exclusive magno (code 823)



Option shown: hyacinth red exclusive magno (code 823)

OTR from **£209,975**[1]

[1]The recommended on-the-road price includes the Road Fund Licence applicable to the standard model plus delivery charge (£780.00 incl. VAT), new vehicle registration fee (£55.00) and number plates (£25.00 incl. VAT). VAT is calculated at the standard rate of 20%. Some of the model features, optional extras and colours shown may not be available, or may only be available in a different specification, or at a different price

In addition to/replacement of Mercedes-AMG G 63 MANUFAKTUR Edition:

Exterior

- 22" AMG forged wheels – cross-spoke design, painted matt black with a high-sheen rim flange (code RG4)
- AMG Night package II – including typography and Mercedes star at front and rear in high-gloss black
- AMG Night package
- Bumper insert in night black magno
- Exterior mirror housings in night black magno
- Paint – magno
- Spare wheel cover in vehicle colour with spare wheel ring in night black magno
- Simulated underguard in night black magno
- Summer tyres
- Underguard in night black magno







Interior

AMG Performance steering wheel in carbon-fibre design/MICROCUT microfibre, heated

Trim and Upholstery

Trim – AMG carbon fibre

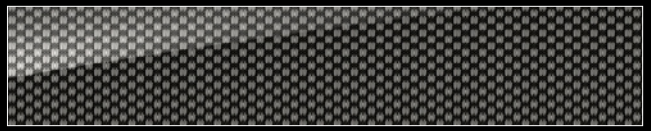

Upholstery – AMG Exclusive nappa leather in black



Become the AMG expert

Unleash a new level of performance.

Step into the world of performance and experience the AMG brand at Mercedes-Benz World – from the powerful sound of the engines to the smell of the leather to the unmistakable design of our vehicles.

Mercedes-Benz World invites all Mercedes-AMG customers to a complimentary adrenaline-packed driving experience. Feel the sensational AMG driving performance, develop your driving skills and even try your hand at power-sliding on the Wet Skid Circle. With expert one-to-one guidance from a Driving Specialist in the passenger seat, experience every inch of our Handling Circuits, Dynamic Straight and low friction surfaces.

› Click here for more information



TERMS AND CONDITIONS
The following customers only are eligible: The first purchaser/registered keeper of a newly registered Mercedes-AMG. The complimentary training must be booked and taken within 12 months of email receipt. The training is available Monday - Friday only (excluding bank holidays) and subject to availability. Upgrades are available for an additional cost, details upon request. Transferable to individuals who reside at the same postal address only. Mercedes-Benz UK Limited reserves the right to amend or withdraw this training experience. Attendees must hold a full UK driving licence. Attendees will be required to sign the Mercedes-Benz World Driving Risk Acknowledgement prior to undertaking the training experience.

The training experience is also subject to the Mercedes-Benz World Terms and Conditions, as applicable. Retailer demonstrator vehicles are not eligible.

Mercedes-AMG prices

Model line	Engine	Transmission	CO_2 WLTP[1,*]	Basic RRP excl. VAT (£)	Total RRP incl. VAT (£)	Road Fund Licence (£)[2] WLTP	Rec. OTR price (£)[3] WLTP	P11D value (£)	BiK tax rate 2026/27 (%)[2]
Mercedes-AMG									
Mercedes-AMG G 63 4MATIC	Petrol – 3,982 cc, 8-cylinder, 585 hp/430 kW Mild hybrid drive – 20 hp/15 kW	AMG SPEEDSHIFT PLUS 9G-TRONIC	337	153,687.50	184,425.00	5,690.00	**190,975.00**	185,230.00	37
Mercedes-AMG Carbon Edition									
Mercedes-AMG G 63 4MATIC	Petrol – 3,982 cc, 8-cylinder, 585 hp/430 kW Mild hybrid drive – 20 hp/15 kW	AMG SPEEDSHIFT PLUS 9G-TRONIC	337	162,020.83	194,425.00	5,690.00	**200,975.00**	195,230.00	37
Mercedes-AMG MANUFAKTUR Edition									
Mercedes-AMG G 63 4MATIC	Petrol – 3,982 cc, 8-cylinder, 585 hp/430 kW Mild hybrid drive – 20 hp/15 kW	AMG SPEEDSHIFT PLUS 9G-TRONIC	337	167,437.50	200,925.00	5,690.00	**207,475.00**	201,730.00	37
Mercedes-AMG Magno Edition									
Mercedes-AMG G 63 4MATIC	Petrol – 3,982 cc, 8-cylinder, 585 hp/430 kW Mild hybrid drive – 20 hp/15 kW	AMG SPEEDSHIFT PLUS 9G-TRONIC	337	169,520.83	203,425.00	5,690.00	**209,975.00**	204,230.00	37

[1]The indicated values were determined according to the prescribed measurement method - Worldwide Harmonised Light Vehicle Test Procedure (WLTP). Figures shown may include options which are not available in the UK. *Figures shown are for comparability purposes; only compare with other cars tested to the same technical procedures. Figures may not reflect real life driving results, which will depend upon a number of factors including factory-fitted options, accessories fitted (post registration), variations in weather, driving styles and vehicle load. Further information about the test used to establish fuel consumption and CO_2 figures can be found at http://www.mercedes-benz.co.uk/WLTP [2]A different first year rate of Vehicle Excise Duty (Road Fund Licence) applies for new cars. Please refer to page 93 for the relevant rate for the second and subsequent years [3]The recommended on-the-road price includes the Road Fund Licence applicable to the standard model plus delivery charge (£780.00 incl. VAT), new vehicle registration fee (£55.00) and number plates (£25.00 incl. VAT). VAT is calculated at the standard rate of 20%. Some of the model features, optional extras and colours shown may not be available, or may only be available in a different specification, or at a different price

Personalisation Overview



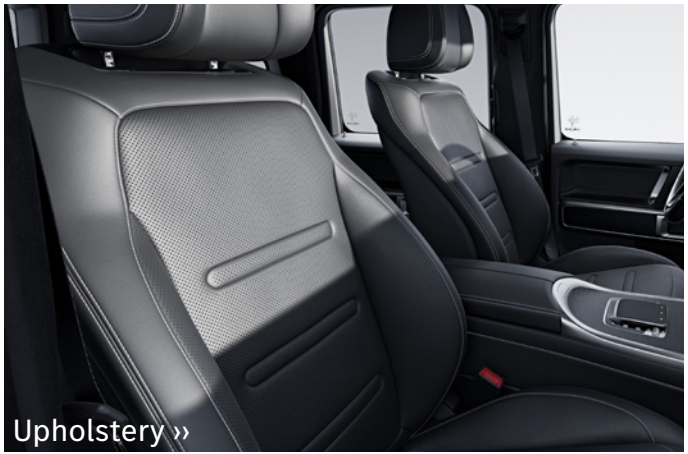







Trim

● Standard □ No-cost option — Not available



VA1 MANUFAKTUR black flamed open-pore ash wood

PROFESSIONAL Line	●
AMG Line Premium Plus	●
Mercedes-AMG G 63	□
Mercedes-AMG G 63 Carbon Edition	–
Mercedes-AMG G 63 MANUFAKTUR Edition	●
Mercedes-AMG G 63 Magno Edition	–



VA2 open-pore natural walnut wood

PROFESSIONAL Line	□
AMG Line Premium Plus	□
Mercedes-AMG G 63	□
Mercedes-AMG G 63 Carbon Edition	–
Mercedes-AMG G 63 MANUFAKTUR Edition	–
Mercedes-AMG G 63 Magno Edition	–



VA5 Metal structure trim element

PROFESSIONAL Line	–
AMG Line Premium Plus	–
Mercedes-AMG G 63	●
Mercedes-AMG G 63 Carbon Edition	–
Mercedes-AMG G 63 MANUFAKTUR Edition	–
Mercedes-AMG G 63 Magno Edition	–



ZG6 AMG carbon fibre

PROFESSIONAL Line	–
AMG Line Premium Plus	–
Mercedes-AMG G 63	–
Mercedes-AMG G 63 Carbon Edition	●
Mercedes-AMG G 63 MANUFAKTUR Edition	–
Mercedes-AMG G 63 Magno Edition	●

Upholstery PROFESSIONAL Line and AMG Line Premium Plus

Nappa leather[1] – no-cost option



501A*+P76 black



545A+P76 truffle brown/black



575A+P76 macchiato beige/black

*Standard. Available with MANUFAKTUR seat belts in red

[1]100% of seat upholstery is pure leather

Upholstery PROFESSIONAL Line and AMG Line Premium Plus

MANUFAKTUR nappa leather[1] – no-cost option



923A+P76 platinum white/black



924A+P76 espresso brown/black



925A+P76 catalana beige/black



927A+P76 bengal red/black



928A+P76 titanium grey pearl/black



934A+P76 saddle brown/black



937A+P76 red pepper/black



938A+P76 sage grey/black

[1]100% of seat upholstery is pure leather

Upholstery PROFESSIONAL Line and AMG Line Premium Plus

MANUFAKTUR nappa leather[1] two-tone – no-cost option



953A+P76 two-tone platinum white/black



954A+P76 two-tone espresso brown/ black



955A+P76 two-tone catalana beige/black



957A+P76 two-tone bengal red/black



958A+P76 two-tone titanium grey/black



964A+P76 two-tone saddle brown/black



967A+P76 two-tone red pepper/black



968A+P76 two-tone sage grey/black

[1]100% of seat upholstery is pure leather

Upholstery PROFESSIONAL Line and AMG Line Premium Plus

MANUFAKTUR nappa leather[1] with contrast topstitching – no-cost option



902A+P76 black with blue topstitching



903A+P76 black with white topstitching



904A+P76 black with bronze topstitching



906A+P76 black with lime green topstitching



907A+P76 black with red topstitching



909A+P76 black with gold topstitching

[1]100% of seat upholstery is pure leather

Upholstery Mercedes-AMG

AMG nappa leather[1] – no-cost option



501A+P76* black



545A+P76* truffle brown/black



575A+P76* macchiato beige/black

*Not available on Mercedes-AMG G 63 MANUFAKTUR Edition or Mercedes-AMG G 63 Magno Edition. Available with MANUFAKTUR seat belts in red

[1]100% of upholstery is pure leather

Upholstery Mercedes-AMG

AMG MANUFAKTUR nappa leather[1] – no-cost option



923A+P76* platinum white/black



924A+P76* espresso brown/black



925A+P76* catalana beige/black



927A+P76* bengal red/black



928A+P76* titanium grey pearl/black



934A+P76* saddle brown/black



937A+P76* red pepper/black



938A+P76* sage grey/black

*Not available on Mercedes-AMG G 63 MANUFAKTUR Edition or Mercedes-AMG G 63 Magno Edition [1]100% of upholstery is pure leather

Upholstery Mercedes-AMG

AMG MANUFAKTUR nappa leather[1] with accent band



913A+P76* two-tone black with accent band in platinum white



914A+P76* two-tone black with accent band in saddle brown



915A+P76* two-tone black with accent band in catalana beige



916A+P76* two-tone black with accent band in lime green



917A+P76* two-tone black with accent band in bengal red



918A+P76* two-tone black with accent band in sage grey



944A+P76* two-tone black with accent band in espresso brown



947A+P76* two-tone black with accent band in red pepper



948A+P76* two-tone black with accent band in titanium grey

*Not available on Mercedes-AMG G 63 MANUFAKTUR Edition or Mercedes-AMG G 63 Magno Edition [1]100% of upholstery is pure leather

Upholstery Mercedes-AMG

AMG MANUFAKTUR nappa leather[1] two-tone – no-cost option



953A+P76* two-tone platinum white/ black



954A+P76* two-tone espresso brown/ black



955A+P76* two-tone catalana beige/ black



957A+P76* two-tone bengal red/black



958A+P76* two-tone titanium grey/black



964A+P76* two-tone saddle brown/black



967A+P76* two-tone red pepper/black



968A+P76* two-tone sage grey/black

*Not available on Mercedes-AMG G 63 MANUFAKTUR Edition or Mercedes-AMG G 63 Magno Edition [1]100% of upholstery is pure leather

Upholstery Mercedes-AMG

AMG MANUFAKTUR nappa leather[1] with contrast topstitching – no-cost option



902A+P76* black with blue topstitching



903A+P76* black with white topstitching



904A+P76* black with bronze topstitching



906A+P76* black with lime green topstitching



907A+P76* black with red topstitching



909A+P76* black with gold topstitching

*Not available on Mercedes-AMG G 63 MANUFAKTUR Edition or Mercedes-AMG G 63 Magno Edition, no-cost option for all other Mercedes-AMG G 63 models

[1]100% of seat upholstery is pure leather

MANUFAKTUR package

● Standard ○ Optional

Indulge in the luxury of choice with the MANUFAKTUR package, which offers an array of upholstery combinations to elevate the iconic G-Class to new heights of personalisation. Experience upgraded upholstery, the invigorating ENERGIZING package Plus, and the comfort of multicontour seats – all tailored to enhance your driving experience.

Designed and priced as a package, including items listed below.

Consisting of:	
Active Multicontour Seat package Plus	Instrument panel in nappa leather
ENERGIZING package Plus	Seat upholstery layout in a diamond design
Extended scope of upholstery in nappa leather: armrest and rear facing of the centre console, door centre panels and trim, armrests in the doors, pull handles on the doors and kneepads on the side of the centre console	

Model line	**MANUFAKTUR package** (code DPM)
PROFESSIONAL Line	–
AMG Line Premium Plus	○
Mercedes-AMG G 63	○
Mercedes-AMG G 63 Carbon Edition	○
Mercedes-AMG G 63 MANUFAKTUR Edition	●
Mercedes-AMG G 63 Magno Edition	●
Total incl. VAT	**£7,995.00**

Optional equipment may change the CO_2 value, please check your desired specification on the online configurator



913A+DPM two-tone black with accent band in platinum white

Please see pages 49-53 for available upholstery options for AMG Line Premium Plus and pages 54-58 for available upholstery options for Mercedes-AMG G-Class variants

MANUFAKTUR package (cont.) Upholstery for AMG Line Premium Plus

Nappa leather[1]



801A+DPM black



808A+DPM macchiato beige/magma grey



825A+DPM truffle brown/black

[1]100% of seat upholstery is pure leather

MANUFAKTUR package (cont.) Upholstery for AMG Line Premium Plus

MANUFAKTUR nappa leather[1]



923A+DPM platinum white/black



924A+DPM espresso brown/black



925A+DPM catalana beige/black



927A+DPM bengal red/black



928A+DPM titanium grey pearl/black



934A+DPM saddle brown/black



937A+DPM red pepper/black



938A+DPM sage grey/black

[1]100% of seat upholstery is pure leather

MANUFAKTUR package (cont.) Upholstery for AMG Line Premium Plus

MANUFAKTUR nappa leather two-tone[1]



953A+DPM two-tone platinum white/ black



954A+DPM two-tone espresso brown/ black



955A+DPM two-tone catalana beige/ black



957A+DPM two-tone bengal red/black



958A+DPM two-tone titanium grey/black



964A+DPM two-tone saddle brown/black



967A+DPM two-tone red pepper/black



968A+DPM two-tone sage grey/black

[1]100% of seat upholstery is pure leather

MANUFAKTUR package (cont.) Upholstery for AMG Line Premium Plus

MANUFAKTUR nappa leather[1] with accent band



913A+DPM two-tone black with accent band in platinum white



914A+DPM two-tone black with accent band in saddle brown



915A+DPM two-tone black with accent band in catalana beige



916A+DPM two-tone black with accent band in lime green



917A+DPM two-tone black with accent band in bengal red



918A+DPM two-tone black with accent band in sage grey



944A+DPM two-tone black with accent band in espresso brown



947A+DPM two-tone black with accent band in red pepper



948A+DPM two-tone black with accent band in titanium grey

[1]100% of seat upholstery is pure leather

MANUFAKTUR package (cont.) Upholstery for AMG Line Premium Plus

MANUFAKTUR nappa leather[1] with contrast topstitching



902A+DPM black with blue topstitching



903A+DPM black with white topstitching



904A+DPM black with bronze topstitching



906A+DPM black with lime green topstitching



907A+DPM black with red topstitching



909A+DPM black with gold topstitching

[1]100% of seat upholstery is pure leather

MANUFAKTUR package (cont.) Upholstery for Mercedes-AMG

AMG nappa leather[1]



801A+DPM black[2]



808+DPM macchiato beige/magma grey[2,3]



825A+DPM truffle brown/black[2]

[1]100% of upholstery is pure leather [2]Not available on Mercedes-AMG G 63 MANUFAKTUR Edition [3]Not available on Mercedes-AMG G 63 Carbon Edition and Mercedes-AMG G 63 Magno Edition

MANUFAKTUR package (cont.) Upholstery for Mercedes-AMG

AMG MANUFAKTUR nappa leather[1]



923A+DPM platinum white/black



924A+DPM espresso brown/black



925A+DPM catalana beige/black



927A+DPM bengal red/black



928A+DPM titanium grey pearl/black



934A+DPM saddle brown/black



937A+DPM red pepper/black



938A+DPM sage grey/black

[1]100% of upholstery is pure leather

MANUFAKTUR package (cont.) Upholstery for Mercedes-AMG

AMG MANUFAKTUR nappa leather two-tone[1]



953A+DPM two-tone platinum white/ black



954A+DPM two-tone espresso brown/ black



955A+DPM two-tone catalana beige/ black



957A+DPM two-tone bengal red/black



958A+DPM two-tone titanium grey/black



964A+DPM two-tone saddle brown/black



967A+DPM two-tone red pepper/black



968A+DPM two-tone sage grey/black

[1]100% of upholstery is pure leather

MANUFAKTUR package (cont.) Upholstery for Mercedes-AMG

AMG MANUFAKTUR nappa leather[1] with accent band



913A+DPM two-tone black with accent band in platinum white



914A+DPM two-tone black with accent band in saddle brown



915A+DPM two-tone black with accent band in catalana beige



916A+DPM two-tone black with accent band in lime green



917A+DPM two-tone black with accent band in bengal red



918A+DPM two-tone black with accent band in sage grey



944A+DPM two-tone black with accent band in espresso brown



947A+DPM two-tone black with accent band in red pepper



948A+DPM two-tone black with accent band in titanium grey

[1]100% of seat upholstery is pure leather

MANUFAKTUR package (cont.) Upholstery for Mercedes-AMG

AMG MANUFAKTUR nappa leather[1] with contrast topstitching



902A+DPM* black with blue topstitching



903A+DPM* black with white topstitching



904A+DPM* black with bronze topstitching



906A+DPM* black with lime green topstitching



907A+DPM* black with red topstitching



909A+DPM* black with gold topstitching

*Not available on Mercedes-AMG G 63 MANUFAKTUR Edition or Mercedes-AMG G 63 Magno Edition, no-cost option for all other Mercedes-AMG G 63 models

[1]100% of seat upholstery is pure leather

Rear Seat Entertainment package

Films, internet, video games or music: the Rear Seat Entertainment System package, with a variety of interfaces for external media, ensures nobody gets bored. The two 10-inch touchscreens installed on the backrest boast brilliant picture quality.

Rear Seat Entertainment package (code DRS) – designed and priced as a package, including items listed below.

Available on all models **Total incl. VAT £3,495.00**

Optional equipment may change the CO_2 value, please check your desired specification on the online configurator



Consisting of:
Internet access via browser and email client possible
Integral media player for playback of a variety of media
Two touchscreen displays with 10-inch screen diagonal for brilliant picture quality
USB 2.0, AUX and HDMI interfaces for the integration of smartphone content, laptop content or games consoles (SD memory cards via adapter)

Please note headphones are not included in this package. Any Bluetooth® headphone will, however, work with this system.

MULTIBEAM LED headlamps[1] (code 641)

The adaptive MULTIBEAM LED headlamps illuminate the road for you according to the situation thanks to intelligent light functions. The headlamps react to the current traffic situation with the help of individually controllable LEDs. You thus enjoy an excellent view.

Available on PROFESSIONAL Line only

Total incl. VAT £1,200.00

Standard on all other models



[1]MULTIBEAM LED headlamps (code 641) removes the protective grille from the headlamps

PROFESSIONAL roof luggage rack[2] (code F52)

You can safely stow larger items of luggage or expedition accessories on the robust roof rack with a wide range of attachment points. Due to its continuous aluminium plates, the whole roof luggage rack can be walked on and is accessed via a removable ladder at the rear. At the same time, it emphasises the versatile nature of your G-Class.

Available on PROFESSIONAL Line only

Total incl. VAT £5,000.00



[2]The PROFESSIONAL roof luggage rack (code F52) increases vehicle height to 2,038 mm

Night package and AMG Night package

● Standard ○ Optional – Not available

Add the Night package or AMG Night package to your G-Class to create an even bolder look – a sleek upgrade featuring darkened indicators, tail lights, and headlights, along with additional exterior elements painted in obsidian black.

Designed and priced as a package, including items listed below.

Consisting of:	
Bumper insert in obsidian black	Radiator grille including louvres and surround of Mercedes star painted obsidian black (code P55 only) or AMG-specific radiator grille, dark chrome-plated (code P56 only)
Darkened indicators, tail lights and headlights	Spare wheel rim painted obsidian black
Exterior mirror housing painted obsidian black	Trim elements bumpers painted in obsidian black
Exterior protective strip with trim insert in black pinstripe	

Model line	**Night package** (code P55)	**AMG Night package** (code P56)
PROFESSIONAL Line	●	–
AMG Line Premium Plus	○	–
Mercedes-AMG G 63	–	○
Mercedes-AMG G 63 Carbon Edition	–	–
Mercedes-AMG G 63 MANUFAKTUR Edition	–	○
Mercedes-AMG G 63 Magno Edition	–	●
Total incl. VAT	**£1,500.00**	**£2,250.00**

Optional equipment may change the CO_2 value, please check your desired specification on the online configurator



Mercedes-AMG G 63 with AMG Night package (code P56)

Extended Night package and Extended AMG Night package

○ Optional – Not available

With the Extended Night package or Extended AMG Night package you can elevate your vehicle's style further with MANUFAKTUR roof, bumpers and flared wheel arches in obsidian black, complemented by MANUFAKTUR running boards in black and an AMG-specific exhaust system in black (Mercedes-AMG models only), all designed to enhance both aesthetics and performance. This package is only available in conjunction with Night package (code P55) or AMG Night package (code P56).

Designed and priced as a package, including items listed below.



Consisting of:	
AMG-specific exhaust system in black (code DPB only)	MANUFAKTUR roof painted in obsidian black
MANUFAKTUR bumpers and flared wheel arches in obsidian black	MANUFAKTUR running boards in black

Model line	**Extended Night package** (code DPS)	**Extended AMG Night package** (code DPB)
PROFESSIONAL Line	–	–
AMG Line Premium Plus	○	–
Mercedes-AMG G 63	–	○
Mercedes-AMG G 63 Carbon Edition	–	○
Mercedes-AMG G 63 MANUFAKTUR Edition	–	○
Mercedes-AMG G 63 Magno Edition	–	–
Total incl. VAT	**£2,995.00**	**£2,995.00**

Optional equipment may change the CO_2 value, please check your desired specification on the online configurator

Extended Night package Magno and Extended AMG Night package Magno

○ Optional – Not available

With the Extended Night package Magno or Extended AMG Night package Magno you can elevate your vehicle's style further with MANUFAKTUR roof, bumpers and flared wheel arches in night black magno, complemented by MANUFAKTUR running boards in black and an AMG-specific exhaust system in black (Mercedes-AMG models only), all designed to enhance both aesthetics and performance. This package is only available in conjunction with Night package (code P55) or AMG Night package (code P56).

Designed and priced as a package, including items listed below.



Consisting of:	
AMG-specific exhaust system in black (code DPA only)	MANUFAKTUR roof painted in night black magno
MANUFAKTUR bumpers and flared wheel arches in night black magno	MANUFAKTUR running boards in black

Model line	**Extended Night package Magno** (code DPN)	**Extended AMG Night package Magno** (code DPA)
PROFESSIONAL Line	–	–
AMG Line Premium Plus	○	–
Mercedes-AMG G 63	–	○
Mercedes-AMG G 63 Carbon Edition	–	○
Mercedes-AMG G 63 MANUFAKTUR Edition	–	○
Mercedes-AMG G 63 Magno Edition	–	○
Total incl. VAT	**£2,995.00**	**£2,995.00**

Optional equipment may change the CO_2 value, please check your desired specification on the online configurator

Design Box

Easily store your charging cable in the design box – a characteristic feature of the G-Class with EQ Technology – on the rear door. In place of the spare wheel.

Design Box (code RS2) – designed and priced as a package, including items listed below.

Available on G 580 with EQ Technology AMG Line Premium Plus only

No-cost option

Not available in conjunction with MANUFAKTUR Schöckl Design package (code HK1)

Optional equipment may change the CO_2 value, please check your desired specification on the online configurator



Consisting of:
Rectangular Design Box on the rear door (upper section in black, lower section painted in body colour)

MANUFAKTUR Schöckl Design package

With the MANUFAKTUR Schöckl Design package, you can enhance the visual appeal of your vehicle. The MANUFAKTUR Schöckl insert within the spare wheel cover, MANUFAKTUR Schöckl exterior protective strip, and MANUFAKTUR Schöckl front door sill panels are all meticulously crafted to represent rugged sophistication.

MANUFAKTUR Schöckl Design package (code HK1) – designed and priced as a package, including items listed below.

Available on AMG Line Premium Plus only
Total incl. VAT £850.00

Not available in conjunction with the Design Box (code RS2)

Optional equipment may change the CO_2 value, please check your desired specification on the online configurator



Consisting of:
MANUFAKTUR Schöckl insert in spare wheel cover
MANUFAKTUR Schöckl exterior protective strip
MANUFAKTUR Schöckl front door sill panels

AMG Performance package

The AMG Performance package has been meticulously crafted to redefine your driving experience. With the inclusion of the RACE START function as well as the AMG Driver's package, boosting the top speed to an electrifying 149 mph, every moment behind the wheel is defined by unparalleled speed and precision.

AMG Performance package (code PT3) – designed and priced as a package, including items listed below.

Available on all Mercedes-AMG G 63 models only
Total incl. VAT £1,445.00

Optional equipment may change the CO_2 value, please check your desired specification on the online configurator



Consisting of:

AMG Driver's package – increases top speed to 149 mph
RACE START function – the RACE START function in the 'Sport' and 'Sport+' drive programmes allows you to access the full sprint potential. Increased start-off engine speed in combination with optimum gearshift timing results in maximum traction. RACE START is also shown on the instrument display.

AMG Off-road package[1,2]

○ Optional – Not available

Push further off the beaten track with the AMG Off-road package. With All-terrain tyres, Exclusive AMG Traction PRO and AMG Active Balance Control driving modes, it adds confident capability where the road ends. Finished with purposeful PROFESSIONAL off-road details and 20" AMG 5-twin-spoke light-alloy wheels.

AMG Off-road package[1,2] (code TP2) – designed and priced as a package, including items listed below.

Consisting of:	
20" AMG alloy wheels – 5-twin-spoke design (code RG7)	PROFESSIONAL mud flaps (rear)
All-terrain tyres	PROFESSIONAL roof luggage rack
Exclusive AMG Active Balance Control driving mode	PROFESSIONAL spare wheel holder
Exclusive AMG Traction PRO driving mode	Rubber mat set

Model line	**AMG Off-road package** (code TP2)
PROFESSIONAL Line	–
AMG Line Premium Plus	–
Mercedes-AMG G 63	○
Mercedes-AMG G 63 Carbon Edition	–
Mercedes-AMG G 63 MANUFAKTUR Edition	○
Mercedes-AMG G 63 Magno Edition	○
Total incl. VAT	**£2,400.00**

Optional equipment may change the CO_2 value, please check your desired specification on the online configurator



[1]Reduction of the top speed to 130 mph [2]Not in conjuction with DRS Rear seat entertainment

Wheels

● Standard – Not available



RK7 18" Alloy wheels[1] – 5-spoke design, painted matt black, 265/60 R 18 tyres

PROFESSIONAL Line	●
AMG Line Premium Plus – G 450 d	–
AMG Line Premium Plus – G 580 with EQ Technology	–



R16 20" AMG alloy wheels – 5-twin-spoke design, painted high-gloss black with a high-sheen finish, 275/50 R 20 tyres

PROFESSIONAL Line	–
AMG Line Premium Plus – G 450 d	●
AMG Line Premium Plus – G 580 with EQ Technology	–



RN8 20" AMG alloy wheels – 10-spoke design, aerodynamically optimised, painted high-gloss black, 275/50 R 20 tyres

PROFESSIONAL Line	–
AMG Line Premium Plus – G 450 d	–
AMG Line Premium Plus – G 580 with EQ Technology	●

Optional equipment may change the CO_2 value, please check your desired specification on the online configurator

[1]Only available with all-terrain tyres

Wheels

□ No-cost option – Not available



R18 20" AMG alloy wheels – 5-twin-spoke design, painted black and burnished, 275/50 R 20 tyres

PROFESSIONAL Line	–
AMG Line Premium Plus – G 450 d	□
AMG Line Premium Plus – G 580 with EQ Technology	–



R17 20" AMG alloy wheels – 5-twin-spoke design, painted himalayas grey with a high-sheen finish, 275/50 R 20 tyres

PROFESSIONAL Line	–
AMG Line Premium Plus – G 450 d	□
AMG Line Premium Plus – G 580 with EQ Technology	–



RN7 20" AMG alloy wheels – 10-spoke design, aerodynamically optimised, painted high-gloss black and with a high-sheen finish, 275/50 R 20 tyres

PROFESSIONAL Line	–
AMG Line Premium Plus – G 450 d	–
AMG Line Premium Plus – G 580 with EQ Technology	□

Optional equipment may change the CO_2 value, please check your desired specification on the online configurator

Wheels

○ Optional – Not available



RN3 19" Alloy wheels[1] – 5-twin-spoke design, painted in high-gloss tremolite grey, 275/55 R19 tyres

PROFESSIONAL Line	○
AMG Line Premium Plus – G450d	–
AMG Line Premium Plus – G580 with EQ Technology	–
Total RRP incl. VAT	**£620.00**



RN4 19" Alloy wheels[1] – 5-twin-spoke design, painted in matt black, 275/55 R19 tyres

PROFESSIONAL Line	○
AMG Line Premium Plus – G450d	–
AMG Line Premium Plus – G580 with EQ Technology	–
Total RRP incl. VAT	**£620.00**

Optional equipment may change the CO_2 value, please check your desired specification on the online configurator

[1]Not available with all-terrain tyres

Wheels Mercedes-AMG

● Standard □ No-cost option



RG4 22" AMG forged wheels – cross-spoke design, painted matt black with a high-sheen rim flange, 295/40 R 22 tyres

Mercedes-AMG G 63	●
Mercedes-AMG G 63 Carbon Edition	●
Mercedes-AMG G 63 MANUFAKTUR Edition	●
Mercedes-AMG G 63 Magno Edition	●



RG5 22" AMG forged wheels – cross-spoke design, painted titanium grey with a high-sheen finish, 295/40 R 22 tyres

Mercedes-AMG G 63	□
Mercedes-AMG G 63 Carbon Edition	□
Mercedes-AMG G 63 MANUFAKTUR Edition	□
Mercedes-AMG G 63 Magno Edition	□



RP5 22" AMG forged wheels[1] – cross-spoke design in MANUFAKTUR version, painted techgold matt with a high-sheen finish, 295/40 R 22 tyres

Mercedes-AMG G 63	□
Mercedes-AMG G 63 Carbon Edition	□
Mercedes-AMG G 63 MANUFAKTUR Edition	□
Mercedes-AMG G 63 Magno Edition	□

Optional equipment may change the CO_2 value, please check your desired specification on the online configurator

[1]Only in conjunction with AMG Performance package (code PT3)

Wheels Mercedes-AMG

□ No-cost option



R19 22" AMG forged wheels – multi-spoke design, painted himalaya grey with a high-sheen finish, 295/40 R 22 tyres

Mercedes-AMG G 63	□
Mercedes-AMG G 63 Carbon Edition	□
Mercedes-AMG G 63 MANUFAKTUR Edition	□
Mercedes-AMG G 63 Magno Edition	□



R20 22" AMG forged wheels – multi-spoke design, painted matt black with a high-sheen finish, 295/40 R 22 tyres

Mercedes-AMG G 63	□
Mercedes-AMG G 63 Carbon Edition	□
Mercedes-AMG G 63 MANUFAKTUR Edition	□
Mercedes-AMG G 63 Magno Edition	□

Optional equipment may change the CO_2 value, please check your desired specification on the online configurator

Optional equipment Mercedes-AMG

□ No-cost option



BS5 AMG brake callipers painted black (front and rear)

Mercedes-AMG G 63	□
Mercedes-AMG G 63 Carbon Edition	□
Mercedes-AMG G 63 MANUFAKTUR Edition	□
Mercedes-AMG G 63 Magno Edition	□

Colour options Non-metallic and metallic paints

● Standard □ No-cost option – Not available



149 polar white non-metallic	
PROFESSIONAL Line	□
AMG Line Premium Plus	□
Mercedes-AMG G 63/G 63 Carbon Edt.	□
Mercedes-AMG G 63 MANUFAKTUR Edt.	–
Mercedes-AMG G 63 Magno Edt.	–



197 obsidian black metallic	
PROFESSIONAL Line	●
AMG Line Premium Plus	●
Mercedes-AMG G 63/G 63 Carbon Edt.	●
Mercedes-AMG G 63 MANUFAKTUR Edt.	–
Mercedes-AMG G 63 Magno Edt.	–



775 iridium silver metallic	
PROFESSIONAL Line	□
AMG Line Premium Plus	□
Mercedes-AMG G 63/G 63 Carbon Edt.	□
Mercedes-AMG G 63 MANUFAKTUR Edt.	–
Mercedes-AMG G 63 Magno Edt.	–



842 sodalite blue metallic	
PROFESSIONAL Line	□
AMG Line Premium Plus	□
Mercedes-AMG G 63/G 63 Carbon Edt.	□
Mercedes-AMG G 63 MANUFAKTUR Edt.	–
Mercedes-AMG G 63 Magno Edt.	–



859 mojave silver metallic	
PROFESSIONAL Line	□
AMG Line Premium Plus	□
Mercedes-AMG G 63/G 63 Carbon Edt.	□
Mercedes-AMG G 63 MANUFAKTUR Edt.	–
Mercedes-AMG G 63 Magno Edt.	–



896 brilliant blue metallic	
PROFESSIONAL Line	□
AMG Line Premium Plus	□
Mercedes-AMG G 63/G 63 Carbon Edt.	□
Mercedes-AMG G 63 MANUFAKTUR Edt.	–
Mercedes-AMG G 63 Magno Edt.	–



989 emerald green metallic	
PROFESSIONAL Line	□
AMG Line Premium Plus	□
Mercedes-AMG G 63/G 63 Carbon Edt.	□
Mercedes-AMG G 63 MANUFAKTUR Edt.	–
Mercedes-AMG G 63 Magno Edt.	–



992 selenite grey metallic	
PROFESSIONAL Line	□
AMG Line Premium Plus	□
Mercedes-AMG G 63/G 63 Carbon Edt.	□
Mercedes-AMG G 63 MANUFAKTUR Edt.	–
Mercedes-AMG G 63 Magno Edt.	–

Please note that, owing to limitations of on-screen representation, paint colours may differ from those shown

Colour options MANUFAKTUR paints

● Standard □ No-cost option ○ Optional – Not available



026 ocean blue metallic	
PROFESSIONAL Line	○
AMG Line Premium Plus	○
Mercedes-AMG G 63/G 63 Carbon Edt.	○
Mercedes-AMG G 63 MANUFAKTUR Edt.	□
Mercedes-AMG G 63 Magno Edt.	–
Total RRP incl. VAT	**£4,000**



041 graphite metallic	
PROFESSIONAL Line	○
AMG Line Premium Plus	○
Mercedes-AMG G 63/G 63 Carbon Edt.	○
Mercedes-AMG G 63 MANUFAKTUR Edt.	●
Mercedes-AMG G 63 Magno Edt.	–
Total RRP incl. VAT	**£4,000**



124 classic grey solid	
PROFESSIONAL Line	○
AMG Line Premium Plus	○
Mercedes-AMG G 63/G 63 Carbon Edt.	○
Mercedes-AMG G 63 MANUFAKTUR Edt.	□
Mercedes-AMG G 63 Magno Edt.	–
Total RRP incl. VAT	**£4,000**



162 south seas blue metallic	
PROFESSIONAL Line	○
AMG Line Premium Plus	○
Mercedes-AMG G 63/G 63 Carbon Edt.	○
Mercedes-AMG G 63 MANUFAKTUR Edt.	□
Mercedes-AMG G 63 Magno Edt.	–
Total RRP incl. VAT	**£4,000**



255 olive metallic	
PROFESSIONAL Line	○
AMG Line Premium Plus	○
Mercedes-AMG G 63/G 63 Carbon Edt.	○
Mercedes-AMG G 63 MANUFAKTUR Edt.	□
Mercedes-AMG G 63 Magno Edt.	–
Total RRP incl. VAT	**£4,000**



464 desert sand non-metallic	
PROFESSIONAL Line	○
AMG Line Premium Plus	○
Mercedes-AMG G 63/G 63 Carbon Edt.	○
Mercedes-AMG G 63 MANUFAKTUR Edt.	□
Mercedes-AMG G 63 Magno Edt.	–
Total RRP incl. VAT	**£4,000**



660 rubellite red metallic	
PROFESSIONAL Line	○
AMG Line Premium Plus	○
Mercedes-AMG G 63/G 63 Carbon Edt.	○
Mercedes-AMG G 63 MANUFAKTUR Edt.	□
Mercedes-AMG G 63 Magno Edt.	–
Total RRP incl. VAT	**£4,000**



693 travertine beige metallic	
PROFESSIONAL Line	○
AMG Line Premium Plus	○
Mercedes-AMG G 63/G 63 Carbon Edt.	○
Mercedes-AMG G 63 MANUFAKTUR Edt.	□
Mercedes-AMG G 63 Magno Edt.	–
Total RRP incl. VAT	**£4,000**



825 deep green non-metallic	
PROFESSIONAL Line	○
AMG Line Premium Plus	○
Mercedes-AMG G 63/G 63 Carbon Edt.	○
Mercedes-AMG G 63 MANUFAKTUR Edt.	□
Mercedes-AMG G 63 Magno Edt.	–
Total RRP incl. VAT	**£4,000**



885 opalite white bright	
PROFESSIONAL Line	○
AMG Line Premium Plus	○
Mercedes-AMG G 63/G 63 Carbon Edt.	○
Mercedes-AMG G 63 MANUFAKTUR Edt.	□
Mercedes-AMG G 63 Magno Edt.	–
Total RRP incl. VAT	**£4,000**

Please note that, owing to limitations of on-screen representation, paint colours may differ from those shown

Colour options MANUFAKTUR paints

□ No-cost option ○ Optional – Not available



904 dark blue non-metallic	
PROFESSIONAL Line	○
AMG Line Premium Plus	○
Mercedes-AMG G 63/G 63 Carbon Edt.	○
Mercedes-AMG G 63 MANUFAKTUR Edt.	□
Mercedes-AMG G 63 Magno Edt.	–
Total RRP incl. VAT	**£4,000**



914 sun yellow non-metallic	
PROFESSIONAL Line	○
AMG Line Premium Plus	○
Mercedes-AMG G 63/G 63 Carbon Edt.	○
Mercedes-AMG G 63 MANUFAKTUR Edt.	□
Mercedes-AMG G 63 Magno Edt.	–
Total RRP incl. VAT	**£4,000**



934 vintage blue non-metallic	
PROFESSIONAL Line	○
AMG Line Premium Plus	○
Mercedes-AMG G 63/G 63 Carbon Edt.	○
Mercedes-AMG G 63 MANUFAKTUR Edt.	□
Mercedes-AMG G 63 Magno Edt.	–
Total RRP incl. VAT	**£4,000**



963 indium grey metallic	
PROFESSIONAL Line	○
AMG Line Premium Plus	○
Mercedes-AMG G 63/G 63 Carbon Edt.	○
Mercedes-AMG G 63 MANUFAKTUR Edt.	□
Mercedes-AMG G 63 Magno Edt.	–
Total RRP incl. VAT	**£4,000**



996 hyacinth red metallic	
PROFESSIONAL Line	○
AMG Line Premium Plus	○
Mercedes-AMG G 63/G 63 Carbon Edt.	○
Mercedes-AMG G 63 MANUFAKTUR Edt.	□
Mercedes-AMG G 63 Magno Edt.	–
Total RRP incl. VAT	**£4,000**

Please note that, owing to limitations of on-screen representation, paint colours may differ from those shown

Colour options MANUFAKTUR magno paints[1]

□ No-cost option ○ Optional



051 platinum magno	
PROFESSIONAL Line	○
AMG Line Premium Plus	○
Mercedes-AMG G 63/G 63 Carbon Edt.	○
Mercedes-AMG G 63 MANUFAKTUR Edt.	□
Mercedes-AMG G 63 Magno Edt.	□
Total RRP incl. VAT	**£6,000**



054 monza grey magno	
PROFESSIONAL Line	○
AMG Line Premium Plus	○
Mercedes-AMG G 63/G 63 Carbon Edt.	○
Mercedes-AMG G 63 MANUFAKTUR Edt.	□
Mercedes-AMG G 63 Magno Edt.	□
Total RRP incl. VAT	**£6,000**



056 night black magno	
PROFESSIONAL Line	○
AMG Line Premium Plus	○
Mercedes-AMG G 63/G 63 Carbon Edt.	○
Mercedes-AMG G 63 MANUFAKTUR Edt.	□
Mercedes-AMG G 63 Magno Edt.	□
Total RRP incl. VAT	**£6,000**



164 dark olive green magno	
PROFESSIONAL Line	○
AMG Line Premium Plus	○
Mercedes-AMG G 63/G 63 Carbon Edt.	○
Mercedes-AMG G 63 MANUFAKTUR Edt.	□
Mercedes-AMG G 63 Magno Edt.	□
Total RRP incl. VAT	**£6,000**



271 citrine brown magno	
PROFESSIONAL Line	○
AMG Line Premium Plus	○
Mercedes-AMG G 63/G 63 Carbon Edt.	○
Mercedes-AMG G 63 MANUFAKTUR Edt.	□
Mercedes-AMG G 63 Magno Edt.	□
Total RRP incl. VAT	**£6,000**



591 south seas blue magno	
PROFESSIONAL Line	○
AMG Line Premium Plus	○
Mercedes-AMG G 63/G 63 Carbon Edt.	○
Mercedes-AMG G 63 MANUFAKTUR Edt.	□
Mercedes-AMG G 63 Magno Edt.	□
Total RRP incl. VAT	**£6,000**



658 copper orange magno	
PROFESSIONAL Line	○
AMG Line Premium Plus	○
Mercedes-AMG G 63/G 63 Carbon Edt.	○
Mercedes-AMG G 63 MANUFAKTUR Edt.	□
Mercedes-AMG G 63 Magno Edt.	□
Total RRP incl. VAT	**£6,000**



659 opalite white magno	
PROFESSIONAL Line	○
AMG Line Premium Plus	○
Mercedes-AMG G 63/G 63 Carbon Edt.	○
Mercedes-AMG G 63 MANUFAKTUR Edt.	□
Mercedes-AMG G 63 Magno Edt.	□
Total RRP incl. VAT	**£6,000**



677 kalahari gold magno	
PROFESSIONAL Line	○
AMG Line Premium Plus	○
Mercedes-AMG G 63/G 63 Carbon Edt.	○
Mercedes-AMG G 63 MANUFAKTUR Edt.	□
Mercedes-AMG G 63 Magno Edt.	□
Total RRP incl. VAT	**£6,000**



739 olive magno	
PROFESSIONAL Line	○
AMG Line Premium Plus	○
Mercedes-AMG G 63/G 63 Carbon Edt.	○
Mercedes-AMG G 63 MANUFAKTUR Edt.	□
Mercedes-AMG G 63 Magno Edt.	□
Total RRP incl. VAT	**£6,000**

[1]MANUFAKTUR magno matt paint finishes require extra care. Please refer to the Owner's Manual for instructions

Please note that, owing to limitations of on-screen representation, paint colours may differ from those shown

Colour options MANUFAKTUR magno paints[1]

□ No-cost option ○ Optional – Not available



795 manganite grey magno	
PROFESSIONAL Line	○
AMG Line Premium Plus	○
Mercedes-AMG G 63/G 63 Carbon Edt.	○
Mercedes-AMG G 63 MANUFAKTUR Edt.	□
Mercedes-AMG G 63 Magno Edt.	□
Total RRP incl. VAT	**£6,000**



964 hyper blue magno	
PROFESSIONAL Line	○
AMG Line Premium Plus	–
Mercedes-AMG G 63/G 63 Carbon Edt.	○
Mercedes-AMG G 63 MANUFAKTUR Edt.	□
Mercedes-AMG G 63 Magno Edt.	□
Total RRP incl. VAT	**£6,000**



376 exclusive green hell magno	
PROFESSIONAL Line	○
AMG Line Premium Plus	–
Mercedes-AMG G 63/G 63 Carbon Edt.	○
Mercedes-AMG G 63 MANUFAKTUR Edt.	□
Mercedes-AMG G 63 Magno Edt.	□
Total RRP incl. VAT	**£7,500**



644 exclusive brilliant blue magno	
PROFESSIONAL Line	○
AMG Line Premium Plus	○
Mercedes-AMG G 63/G 63 Carbon Edt.	○
Mercedes-AMG G 63 MANUFAKTUR Edt.	□
Mercedes-AMG G 63 Magno Edt.	□
Total RRP incl. VAT	**£7,500**



823 exclusive hyacinth red magno	
PROFESSIONAL Line	○
AMG Line Premium Plus	○
Mercedes-AMG G 63/G 63 Carbon Edt.	○
Mercedes-AMG G 63 MANUFAKTUR Edt.	□
Mercedes-AMG G 63 Magno Edt.	□
Total RRP incl. VAT	**£7,500**

[1]MANUFAKTUR magno matt paint finishes require extra care. Please refer to the Owner's Manual for instructions

Please note that, owing to limitations of on-screen representation, paint colours may differ from those shown

Standard equipment

● Standard △ Part of a package – Not available

Engine, Transmission and Suspension	PROFESSIONAL Line	AMG Line Premium Plus
4MATIC Permanent four-wheel drive	●	●
100% differential locks (G 450 d only)	●	●
Charging cable – Mode 3 cable (5 metres, straight) for wallbox and public charging stations (G 580 with EQ Technology only)	–	●
Charging system – rated at 11 kW AC and 200 kW DC (G 580 with EQ Technology only)	–	●
Differential locks (transfer case, front and rear axle) (G 450 d only)	●	●
DYNAMIC SELECT with seven transmission modes: 'Comfort', 'ECO', 'Sport', 'Individual', 'Trail', 'ROCK' and 'Sand' (G 450 d only)	●	●
ELECTRIC DYNAMIC SELECT with five transmission modes: 'Comfort', 'Sport', 'Individual', 'Trail', 'ROCK' and five recuperation levels 'Dauto', 'D+', 'D', 'D-', 'D - -' (G 580 with EQ Technology only)	–	●
G STEERING[1] – can significantly reduce the turning circle of the all-new electric G-Class when driving off-road or on loose surfaces (G 580 with EQ Technology only)	–	●
G TURN[1] – drivers can turn the all-new electric G-Class almost on the spot. The vehicle performs up to two complete vehicle turns in the desired direction on unpaved or loose surfaces (G 580 with EQ Technology only)	–	●
Off-road crawling[2] – provides drivers with additional support when driving off-road by maintaining a pre-set speed (G 580 with EQ Technology only)	–	●
Suspension with selective passive damping system	●	●
Transmission – 9G-TRONIC transmission with cruise control and variable speed limiter (G 450 d only)	●	●
Transmission – single-speed transmission with cruise control and variable speed limiter (G 580 with EQ Technology only)	–	●

Exterior	PROFESSIONAL Line	AMG Line Premium Plus
Ambient lighting with projection of brand logo	●	●
Bodystyling – AMG Line	–	●
Bodystyling – PROFESSIONAL Line	●	–
Brake calipers with 'Mercedes-Benz' lettering	–	●
Bumper insert in stainless steel	–	●
Diesel particulate filter (G 450 d only)	●	●
Door mirrors – electrically adjustable and heated Integrated indicators, front area lighting and automatically dimming driver's mirror	●	●
Electric sunroof – sliding, with one-touch opening	●	●
Exterior mirror housings in obsidian black	●	△
Exterior mirror housings in vehicle colour	–	●
Exterior protective strip with trim insert in brushed aluminium	–	●
Heated windscreen	–	●
Lights – Adaptive Highbeam Assist Plus – the driver is free to concentrate on the traffic without constantly having to select between low and high beam	△	●
Lights – LED High Performance headlamps with PROFESSIONAL protective grilles for headlamps	●	–
Lights – MULTIBEAM LED headlamps with individually controlled LEDs precisely mask out other vehicles and at the same time illuminate the surroundings in light which is almost as bright as daylight without dazzling other road users	△	●
Low range gear reduction (electronically selectable while driving)	●	●

[1]It is not permissible to use G-TURN and G-STEERING on any public roads and such use is in no way authorised, promoted or condoned. Use G-TURN and G-STEERING only on loose or soft surfaces, e.g. gravel or snow, with relevant land permission in front or from any obstacles

[2]The intelligent off-road crawl function is an aid only. The driver is responsible at all times for maintaining a sufficient distance from the vehicle in front or from any obstacles

Standard equipment

● Standard ○ Optional △ Part of a package – Not available

Exterior (continued)	PROFESSIONAL Line	AMG Line Premium Plus
Night package	●	○
Privacy glass – dark glass from B-pillar backwards	●	●
PROFESSIONAL mud flaps (front and rear)	●	–
PROFESSIONAL spare wheel holder	●	–
Rain-sensing wipers	●	●
Radiator grille in aluminium	–	●
Running boards in silver	–	●
Spare wheel cover in vehicle colour with spare wheel ring in stainless steel	–	●
Tail lights featuring LED technology	●	●
Trailer coupling with ESP® trailer stabilisation (G 450 d only)	●	●
Underguard in black – reinforced underfloor panelling the full length of the vehicle	●	△
Underguard in silver – reinforced underfloor panelling the full length of the vehicle	–	●

Wheels	PROFESSIONAL Line	AMG Line Premium Plus
18" Alloy wheels – 5-spoke design, painted matt black, 265/60 R 18 tyres (code RK7)	●	–
20" AMG alloy wheels – 5-twin-spoke design, painted high-gloss black with a high-sheen finish, 275/50 R 20 tyres (code R16) (G 450 d only)	–	●
20" AMG alloy wheels – 10-spoke design, aerodynamically optimised, painted high-gloss black, 275/50 R 20 tyres (code RN8) (G 580 with EQ Technology only)	–	●
Spare wheel	●	●
Tyres – all-terrain tyres[1]	●	–
Tyres – summer tyres[2]	○	●

[1]Only available with RK7 18" alloy wheels [2]Not available with RK7 18" alloy wheels

Interior	PROFESSIONAL Line	AMG Line Premium Plus
Ambient lighting – 64 colours	●	●
Automatically dimming rear-view mirror	●	●
Centre armrest between front seats with integrated stowage compartment	●	●
Cup holders – front (2) and rear (2)	●	●
Dashboard – leather	●	●
Electric windows (4)	●	●
Floor mats – rubber	●	–
Floor mats with 'AMG' lettering	–	●
Interior – EXCLUSIVE Line	●	●
Ionisation of interior air including fine-particle activated charcoal filter system	●	●
KEYLESS-GO starting function	●	●
Luggage compartment cover	●	●
Memory package – memory function for seats, head restraints, exterior mirrors and steering wheel	●	●
Partition net	●	●
Seats – electrically adjustable (front and rear)	●	●
Seats – heated (front and rear)	●	●
Seats – rear bench split-folding ⅓:⅔	●	●
Seat belts, 3-point design in black	●	●
Stainless steel door sill panels, set of four, illuminated, with 'Mercedes-Benz' lettering at the front	–	●
Stowage Space package – including removable double cup holder in centre console, bottle holders in door pockets, map pockets on back of front seats, and glasses compartment in overhead control panel	●	●
THERMOTRONIC automatic climate control with three climate zones and three climate styles: 'Medium', 'Diffuse' and 'Focused'	●	●

Standard equipment

● Standard – Not available

	AMG Line Premium Plus	PROFESSIONAL Line
Steering		
Steering column – electrically adjustable with automatic adjustment for entry/exit	●	●
Steering wheel – heated	●	–
Steering wheel – multifunction steering wheel in nappa leather	–	●
Steering wheel – multifunction sports steering wheel in nappa leather	●	–
Paint, Trim and Upholstery		
Paint – metallic	●	●
Roof lining – MICROCUT roof liner in black	●	●
Trim – MANUFAKTUR black flamed open-pore ash wood	●	●
Upholstery – nappa leather in black	●	●

	AMG Line Premium Plus	PROFESSIONAL Line
Communications and In-Car Entertainment		
12 V sockets in centre console, rear and load compartment	●	●
Bluetooth® interface for hands-free telephony	●	●
Burmester® 3D surround sound system	●	●
Communications module (LTE) for the use of Digital Extras[1]	●	●
DAB digital radio tuner	●	●
Digital Extras (standard services)[1] – emergency call system (eCall),[2] accident recovery, breakdown management and maintenance management	●	●
G-ROAR – a unique sound experience inspired by the sound of a V8 engine (G 580 with EQ Technology only)	–	●
MBUX augmented reality navigation	●	●
MBUX multimedia system	●	●
Smartphone integration[3] comprising Apple CarPlay® and Android Auto™ – see www.apple.com/uk/ios/carplay/ or www.android.com/intl/en_uk/auto for compatibility and approved apps. Certain features and apps require a 3G/4G data connection. Control of features available through voice control and controller on centre console	●	●
Sound personalisation	●	●
Two USB ports (rear)	●	●
Widescreen cockpit with dual bonded 12.3" widescreen displays	●	●
Wireless charging[3] (front)	–	●

[1]The connection of the communication module to the mobile phone network including the emergency call system depends on the respective network coverage and availability of network providers

[2]Please be aware Mercedes-Benz emergency call system comes as standard for the first 10 years of the vehicle's lifecycle

[3]Compatible mobile phone required

Standard equipment

● Standard – Not available

Safety and Assistance Systems	PROFESSIONAL Line	AMG Line Premium Plus
Active Parking Assist with PARKTRONIC[1]	●	●
Anti-lock braking system (ABS) with Brake Assist (BAS)	●	●
Anti-theft alarm system with tow-away protection and interior motion sensor (Thatcham Catergory 1 compliant)	●	●
ATTENTION ASSIST – can detect typical symptoms of drowsiness on the basis of driver behaviour and alert the driver to increasing fatigue and inattention	●	●
Dashcam	●	●
Driving Assistance package[1] (see page 10 for details)	●	●
Electronic Stability Programme (ESP®) with Acceleration Skid Control (ASR)	●	●
Four-wheel Electronic Traction System (4ETS)	●	●
GUARD 360° Vehicle Protection Plus[2] – available to use free of charge for three years following activation,[3] with anti-theft protection hardware including alarm and immobilizer. Theft notification and park damage detection, stolen vehicle locator, 360° surroundview-camera snapshots and remote key immobilizer	●	●
Headlight Assist – automatic headlamp activation	●	●
i-Size child seat attachment system for outer rear seats	●	●

	PROFESSIONAL Line	AMG Line Premium Plus
OFFROAD COCKPIT – visualises all relevant data when driving in unpaved off-road terrain	●	●
Parking package with 360° camera	●	●
PRE-SAFE® system – preventive occupant protection	●	●
Remote and Charging Services Premium[2] – available to use free of charge for three years following activation[3] (G 580 with EQ Technology only)	–	●
Remote Services Premium[2] – available to use free of charge for three years following activation[3] (G 450 d only)	●	●
Seat belt pre-tensioners (4)	●	●
Service indicator ASSYST	●	●
Technology package – maximum safety and relaxed driving with the Driving Assistance package[1] and Parking package with 360° camera	●	●
Traffic Sign Assist – available to use free of charge for three years following activation[3]	●	●
Transparent bonnet	●	●
Tyre pressure monitoring system	●	●

[1]Our driver assistance and safety systems are aids and do not relieve you of your responsibility as the driver. Please take note of the information in the Owner's Manual and the system limits which are described therein [2]The connection of the communication module to the mobile phone network including the emergency call system depends on the respective network coverage and availability of network providers [3]To use this service, you must register on the Mercedes-Benz portal and also accept the Terms of Use for the Digital Extras. In addition, the respective vehicle must be paired with the user account. Upon expiry of the initial term, the services can be extended for a fee. Initial activation of the services is possible within 1 year of first registration or commissioning by the customer, whichever occurs first

Standard equipment Mercedes-AMG

● Standard ○ Optional △ Part of a package – Not available

	G 63	G 63 Carbon Edition	G 63 MANUFAKTUR Edition	G 63 Magno Edition
Engine, Transmission and Suspension				
4MATIC Permanent four-wheel drive	●	●	●	●
100% differential locks	●	●	●	●
AMG ACTIVE RIDE CONTROL with active hydraulic roll stabilisation	●	●	●	●
AMG DYNAMIC SELECT with 8 transmission modes 'Comfort', 'Slippery', 'Sport', 'Sport+', 'Individual', 'Trail', 'Rock', 'Sand' and AMG Dynamics agilisation functions 'Basic', 'Advanced' and 'Pro'	●	●	●	●
AMG high-performance braking system with internally ventilated and perforated brake discs measuring 400 × 38 mm at the front, 370 × 22 mm at the rear	●	●	●	●
AMG SPEEDSHIFT 9G-TRONIC sports transmission with cruise control and variable speed limiter	●	●	●	●
Exterior				
Ambient lighting with projection of brand logo	●	●	●	●
AMG bodystyling with exclusive Mercedes-AMG G 63 front aprons with cooling air intakes and flared wheel arches in vehicle colour	●	●	●	●
AMG brake callipers, painted red	●	●	●	●
AMG Exterior Carbon-Fibre package	–	●	–	–
AMG Night package	○	–	○	●
AMG Night package II – typography in high-gloss black and Mercedes-Benz star in high-gloss black front and rear	–	–	–	●
AMG mirror cover in carbon-fibre design	–	●	–	–
AMG Performance exhaust system, selectable and two chrome-trimmed twin tailpipes, left and right	●	●	●	●
AMG-specific radiator grille with AMG logo	●	●	●	●
Bumper insert in carbon fibre	–	●	–	–
Bumper insert in night black magno	△	–	△	●
Bumper insert in obsidian black	△	–	△	–
Bumper insert in stainless steel	●	–	●	–
Door mirrors – electrically adjustable and heated Integrated indicators, front area lighting and automatically dimming driver's mirror	●	●	●	●
Electric sunroof – sliding, with one-touch opening	●	●	●	●
Exterior mirror housings in night black magno	△	–	△	●
Exterior mirror housings in obsidian black	△	–	△	–
Exterior mirror housings in vehicle colour	●	–	●	–
Exterior protective strip with trim insert in black	●	–	●	●
Exterior protective strip with trim insert in carbon-fibre design	–	●	–	–
Heated windscreen	●	●	●	●
Low range gear reduction (electronically selectable while driving)	●	●	●	●
MANUFAKTUR Logo package	–	–	●	–
MANUFAKTUR logo projector in exterior mirror	–	–	●	–
Lights – Adaptive Highbeam Assist Plus – the driver is free to concentrate on the traffic without constantly having to select between low and high beam	●	●	●	●
Lights – MULTIBEAM LED headlamps enable continuous main beam without dazzling other road users. Individually controlled LEDs precisely mask out other vehicles and at the same time illuminate the surroundings in light which is almost as bright as daylight	●	●	●	●
Petrol particulate filter	●	●	●	●
Privacy glass – dark glass from B-pillar backwards	●	●	●	●
Rain-sensing wipers	●	●	●	●

Standard equipment Mercedes-AMG

● Standard △ Part of a package – Not available

	G 63	G 63 Carbon Edition	G 63 MANUFAKTUR Edition	G 63 Magno Edition
Exterior (continued)				
Tail lights featuring LED technology	●	●	●	●
Trailer coupling with ESP® trailer stabilisation	●	●	●	●
Underguard – front simulated underguard in carbon fibre	–	●	–	–
Underguard – simulated underguard in night black magno	△	–	△	●
Underguard – silver	●	–	●	–
'V8 BITURBO' lettering	●	●	●	●
Wheels				
22" AMG forged wheels – cross-spoke design, painted matt black with a high-sheen rim flange, 295/40 R 22 tyres (code RG4)	●	●	●	●
Spare wheel	●	●	●	●
Spare wheel cover – vehicle colour	●	–	–	●
Spare wheel cover – carbon fibre	–	●	–	–
Spare wheel cover – MANUFAKTUR spare wheel cover in vehicle colour	–	–	●	–
Spare wheel ring – night black magno	△	–	△	●
Spare wheel ring – obsidian black	–	●	–	–
Spare wheel ring – stainless steel	●	–	–	–
Spare wheel ring – vehicle colour	–	–	●	–
Summer tyres	●	●	●	●

	G 63	G 63 Carbon Edition	G 63 MANUFAKTUR Edition	G 63 Magno Edition
Interior				
12 V sockets in centre console, rear and load compartment	●	●	●	●
Active Multicontour Seat package Plus – SUPERIOR Line interior, dashboard in nappa leather	△	△	●	●
Ambient lighting – 64 colours	●	●	●	●
AMG floor mats with 'AMG' lettering	●	●	●	●
Automatically dimming rear-view mirror	●	●	●	●
Centre armrest between front seats with integrated stowage compartment	●	●	●	●
Cup holders – front (2) and rear (2)	●	●	●	●
Dashboard – leather	●	●	–	–
Dashboard – nappa leather	△	△	●	●
Electric windows (4)	●	●	●	●
ENERGIZING package Plus – for enhanced performance capability at the wheel and an extremely pleasant journey, this package combines the active multicontour seats with ENERGIZING comfort control. Your vehicle can revitalise and pamper you with 6 perfectly composed programs including massage function	△	△	●	●
Ionisation of interior air including fine-particle activated charcoal filter system	●	●	●	●
KEYLESS-GO starting function	●	●	●	●
Luggage compartment cover	●	●	●	●
MANUFAKTUR grab handles in leather	–	–	●	–
MANUFAKTUR package – see page 48 for details	–	–	●	–
Memory package – memory function for seats, head restraints, exterior mirrors and steering wheel	●	●	●	●
Partition net	●	●	●	●

Standard equipment Mercedes-AMG

● Standard ○ Optional △ Part of a package – Not available

	G 63	G 63 Carbon Edition	G 63 MANUFAKTUR Edition	G 63 Magno Edition
Interior (continued)				
Seats – rear bench seats split-folding ⅓:⅔	●	●	●	●
Seats – heated and electrically adjustable (front)	●	●	●	●
Seats – heated (rear)	●	●	●	●
Seats – ventilated, multicontour seats (front)	△	△	●	●
Seat belts, 3-point design in black	●	●	●	●
Seat belt pre-tensioners (4)	●	●	●	●
Set of four illuminated stainless steel door sill panels	●	●	●	●
Stowage Space package – including removable double cup holder in centre console, bottle holders in door pockets, map pockets on back of front seats, and glasses compartment in overhead control panel	●	●	●	●
THERMOTRONIC automatic climate control with three climate zones and three climate styles: Medium, Diffuse and Focused	●	●	●	●
Steering				
AMG Performance steering wheel in carbon fibre/MICROCUT microfibre 3-spoke design, with flattened bottom section, steering wheel trim in silver chrome with 'AMG' lettering and silver-coloured aluminium shift paddles, 12 o'clock marking and touch control buttons	–	●	–	●
AMG Performance steering wheel in nappa leather 3-spoke design, with flattened bottom section, steering wheel trim in silver chrome with 'AMG' lettering and silver-coloured aluminium shift paddles, 12 o'clock marking and touch control buttons	●	–	●	–
AMG steering wheel buttons	●	●	●	●
Heated steering wheel	●	●	●	●
Steering column – electrically adjustable, with automatic adjustment for entry/exit	●	●	●	●

	G 63	G 63 Carbon Edition	G 63 MANUFAKTUR Edition	G 63 Magno Edition
Paint, Trim and Upholstery				
Paint – magno	○	○	○	●
Paint – MANUFAKTUR	–	–	●	–
Paint – metallic	●	●	–	–
Roof lining – MICROCUT roof liner in black	●	●	●	●
Trim – AMG carbon fibre	–	●	–	●
Trim – MANUFAKTUR black flamed open-pore ash wood	○	–	●	–
Trim – metal structure trim element	●	–	–	–
Upholstery – nappa leather in black	●	●	–	–
Upholstery – Exclusive nappa leather in black	△	△	●	●
Communications and In-Car Entertainment				
AMG instrument cluster with dual bonded 12.3-inch widescreen displays	●	●	●	●
Bluetooth® interface for hands-free telephony	●	●	●	●
Communications module (LTE) for the use of Digital Extras[1] – preparation for use of Digital Extras with particularly rapid and dependable data transfer	●	●	●	●
DAB digital radio tuner	●	●	●	●
Digital Extras (standard services)[1] – emergency call system (eCall),[2] accident recovery, breakdown management and maintenance management	●	●	●	●
MBUX augmented reality navigation	●	●	●	●
MBUX multimedia system	●	●	●	●

[1]The connection of the communication module to the mobile phone network including the emergency call system depends on the respective network coverage and availability of network providers

[2]Please be aware Mercedes-Benz emergency call system comes as standard for the first 10 years of the vehicle's lifecycle

Standard equipment Mercedes-AMG

● Standard – Not available

	G 63	G 63 Carbon Edition	G 63 MANUFAKTUR Edition	G 63 Magno Edition
Communications and In-Car Entertainment (continued)				
Smartphone integration[1] comprising Apple CarPlay® and Android Auto™ – see www.apple.com/uk/ios/carplay/ or www.android.com/intl/en_uk/auto for compatibility and approved apps. Certain features and apps require a 3G/4G data connection. Control of features available through voice control and controller on centre console	●	●	●	●
Surround sound system – Burmester® 3D surround sound system 16 high-performance speakers as well as electronics and acoustic features tailored specifically to the interior make for the first-class Burmester sound	●	●	●	●
Sound personalisation	●	●	●	●
Two USB ports in the rear	●	●	●	●
Wireless charging[1] (front)	●	●	●	●
Widescreen cockpit with dual bonded 12.3-inch widescreen displays	●	●	●	●
Safety and Assistance Systems				
Active Blind Spot Assist[2]	●	●	●	●
Active Distance Assist DISTRONIC[2]	●	●	●	●
Active Parking Assist with PARKTRONIC[2]	●	●	●	●
Anti-lock braking system (ABS) with Brake Assist (BAS)	●	●	●	●
Anti-theft alarm system with tow-away protection and interior motion sensor (Thatcham Catergory 1 compliant)	●	●	●	●
ATTENTION ASSIST – can detect typical symptoms of drowsiness on the basis of driver behaviour and alert the driver to increasing fatigue and inattention	●	●	●	●

	G 63	G 63 Carbon Edition	G 63 MANUFAKTUR Edition	G 63 Magno Edition
Dashcam	●	●	●	●
Driving Assistance package[2] (see page 10 for details)	●	●	●	●
Electronic Stability Programme (ESP®) with Acceleration Skid Control (ASR)	●	●	●	●
Four-wheel Electronic Traction System (4ETS)	●	●	●	●
GUARD 360° Vehicle Protection Plus[3] – available to use free of charge for three years following activation,[4] with anti-theft protection hardware including alarm and immobilizer. Theft notification and park damage detection, stolen vehicle locator, 360° surroundview-camera snapshots and remote key immobilizer	●	●	●	●
Headlight Assist – automatic headlamp activation	●	●	●	●
i-Size child seat attachment system for outer rear seats	●	●	●	●
Parking Assist PARKTRONIC	●	●	●	●
Parking package with 360° camera	●	●	●	●
PRE-SAFE® system – preventive occupant protection	●	●	●	●
Remote Services Premium[3] – available to use free of charge for three years following activation[4]	●	●	●	●
Service indicator ASSYST	●	●	●	●
Technology package – maximum safety and relaxed driving with the Driving Assistance package[2] and Parking package with 360° camera	●	●	●	●
Traffic Sign Assist – available to use free of charge for three years following activation[4]	●	●	●	●
Transparent bonnet	●	●	●	●
Tyre pressure monitoring system	●	●	●	●

[1]Compatible mobile phone required [2]Our driver assistance and safety systems are aids and do not relieve you of your responsibility as the driver. Please take note of the information in the Owner's Manual and the system limits which are described therein [3]The connection of the communication module to the mobile phone network including the emergency call system depends on the respective network coverage and availability of network providers [4]To use this service, you must register on the Mercedes-Benz portal and also accept the Terms of Use for the Digital Extras. In addition, the respective vehicle must be paired with the user account. Upon expiry of the initial term, the services can be extended for a fee. Initial activation of the services is possible within 1 year of first registration or commissioning by the customer, whichever occurs first

Genuine accessories

We've developed a range of Accessories you can add to help personalise and enhance your G-Class.



Boot tub, flat

For everyday transport. There is a lot that needs to be transported in this day and age of mobility: The easy-clean boot tub is also suitable for liquids. The shape of the tub, with its slightly raised edge, is optimally tailored to the load area. Very robust – made from impact-resistant, non-split polypropylene. Odourless. The honeycomb structure prevents the load from slipping. Protected base. (A4658103402)



Roof spoiler

Unflinchingly individual: a roof spoiler from Mercedes-Benz sets your vehicle apart. It gives the rear a more compact, powerful, accentuated look. Head-turning bodystyling, and safe too: the roof spoiler does not affect the field of vision. Quality on top: the roof spoiler is highly durable, thanks to the use of precision-fit, dimensionally stable polyurethane. Also offers many other compelling selling points: for example it is simple to secure in place using special adhesive tape. Supplied primed – ideal for painting. Does not need to be entered in vehicle documents. (A4657930000)



Basic carrier bars, three crossbars

Aluminium carrier bars, precision-tailored to the body of your Mercedes-Benz – the perfect basis for a range of transport accessories: ski and snowboard rack, bicycle rack or roof boxes. Fitted in next to no time without the use of tools, thanks to new, innovative quick-release fasteners. (A4638902900)

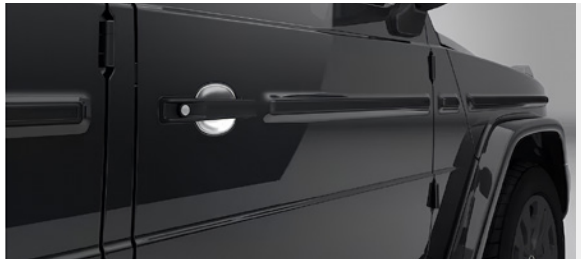

Door handle recesses

An exclusive highlight: the refined, chrome-design door handle recesses lend the vehicle a polished, individual look. The stable, robust material is precision-tailored to the bodywork and protects the paintwork in the recess from scratches. (A4657201300)



AMG velour floor mats

Floor mats have to undergo rigorous testing before they are deemed worthy of the star logo: durability, fade-resistant colour and a neutral odour, even after three winters of use, are all specifications which must be met without compromise. The mats are precision-tailored to your Mercedes-Benz using the vehicle's original CAD data. Can be clip-fastened to the floor to prevent slipping. (A46568064019J74)

All the above accessories are subject to availability and compatibility. Please ask your Mercedes-Benz Authorised Repairer for more information

Technical data

● Standard – Not available

Model		G 450 d	G 580 with EQ Technology	Mercedes-AMG G 63
Engine				
Fuel delivery		Diesel	–	Petrol
Total displacement	cc	2,989	–	3,982
Arrangement/cylinders/valves		in-line/6/24	–	V/8/32
Power[1]	hp (kW) at rpm			
Combustion engine		367 (270)/4,000	–	585 (430)/6,000
Mild hybrid drive		20 (15)	–	20 (15)
Electric motor		–	587 (432)/–	–
Torque[1]	Nm at rpm			
Combustion engine		750/1,350–2,800	–	850/2,500–3,500
Electric motor		–	1,164/–	–
Compression ratio		15.5:1	–	8.6:1
Equivalent All-Electric Range (EAER)[2]	mi	–	290–291	–
Battery type (capacity)	kWh	–	Lithium-ion (117)	–
Range power consumption, combined[2,3]	Wh/km	–	287	–
Charging time				
DC charging station (200 kW DC) 10–80%[4]		–	32 mins	–
Wallbox (11 kW AC), 0–100%[5]		–	12 hrs	–
On-board charger	kW	–	11 AC; 200 DC	–
Emissions standard		Euro 6 EB	Euro 6-WLTP (for BEVs only)	Euro 6 EB

[1]Figures according to Directive 80/1269/EEC in the currently applicable version [2]Figures shown are for comparability purposes; only compare with other cars tested to the same technical procedures. Figures may not reflect real life driving results, which will depend upon a number of factors including the starting charge of the battery, factory-fitted options, accessories fitted (post registration), variations in weather, driving styles and vehicle load. Further information about the test used to establish range, power consumption and CO_2 figures can be found at http://www.mercedes-benz.co.uk/WLTP [3]Specified voltage and current values refer to network infrastructure and can be limited by the vehicle [4]Specified voltage and current values refer to network infrastructure and can be limited by the vehicle. Times are from 10-80% charge using public rapid charging at 200 kW [5]Specified voltage and current values refer to network infrastructure and can be limited by the vehicle. Times are from 0-100% charge using a wallbox (three-phase) or standard socket (single-phase)

Technical data

Model		G 450 d	G 580 with EQ Technology	Mercedes-AMG G 63
Transmission				
9G-TRONIC automatic		●	–	–
Single-speed automatic		–	●	–
AMG SPEEDSHIFT PLUS 9G-TRONIC		–	–	●
Performance				
Acceleration 0–62 mph	sec	5.8	4.7	4.4
Top speed[6]	mph	130	112	137
Weights and capacities				
Kerb weight[7]	kg	2,647–2,718	3,128–3,176	2,660–2,744
Perm. Gross Vehicle Weight	kg	3,200	3,200	3,200
Boot capacity – seats up/seats down	l	640/2,010	555/1,990	640/2,010
Towing capacity – unbraked/braked	kg	750/3,500	-/-	750/3,500
Fuel tank capacity/of which reserve	l	100/12	-/-	100/12
Turning circle	m	13.6	13.6	13.43
Fuel consumption[8,9,10]				
Combined (consumption dependent on chosen optional equipment)	l/100 km mpg	9.9–8.8 28.5–32.1	- -	15.6–14.8 18.1–19.1
Insurance				
Group rating		50P	50P	50P
Insurance ratings may vary depending on model line and specification.				

[6]Electronically limited [7]Mass of the vehicle in running order with at least 90% full fuel tank, plus the mass of the driver (estimated by law at 75 kg), fuel and fluids, equipped with the standard equipment as specified by the manufacturer as well as, where applicable, the mass of the body, cab, trailer coupling and spare wheel(s) as well as tools. Optional extras, additional equipment and accessories can influence the weight, residual payload, rolling resistance, aerodynamics, etc., and therefore also affect the consumption/CO_2 values [8]All figures are based on a standard specification with the smallest tyre size [9]The choice of wheels and transmission may affect CO_2 emissions and corresponding Road Fund Licence [10]The indicated values were determined according to the prescribed measurement method - Worldwide Harmonised Light Vehicle Test Procedure (WLTP). Figures shown may include options which are not available in the UK

Electric range and consumption G 580 with EQ Technology

Model	Energy Consumption – combined (Wh/km)[1]	All Electric Range (km)[1]	All Electric Range (miles)[1]
AMG Line Premium Plus	287	468	291
AMG Line Premium Plus + MANUFAKTUR Schöckl Design package	287	468	291
AMG Line Premium Plus + Design Box	287	467	290
AMG Line Premium Plus + Rear Seat Entertainment package	287	467	290
AMG Line Premium Plus + MANUFAKTUR Schöckl Design package + Rear Seat Entertainment package	287	467	290
AMG Line Premium Plus + Design Box + Rear Seat Entertainment package	287	467	290
AMG Line Premium Plus + MANUFAKTUR package	287	467	290
AMG Line Premium Plus + MANUFAKTUR Schöckl Design package + MANUFAKTUR package	287	467	290
AMG Line Premium Plus + MANUFAKTUR Schöckl Design package + Rear Seat Entertainment package + MANUFAKTUR package	287	466	290
AMG Line Premium Plus + Design Box + MANUFAKTUR package	287	467	290
AMG Line Premium Plus + Design Box + MANUFAKTUR package + Rear Seat Entertainment package	287	466	290

[1]Figures shown are for comparability purposes; only compare with other cars tested to the same technical procedures. Figures may not reflect real life driving results, which will depend upon a number of factors including the starting charge of the battery, factory-fitted options, accessories fitted (post registration), variations in weather, driving styles and vehicle load. Further information about the test used to establish range, power consumption and CO_2 figures can be found at http://www.mercedes-benz.co.uk/WLTP

AMG Line Premium Plus

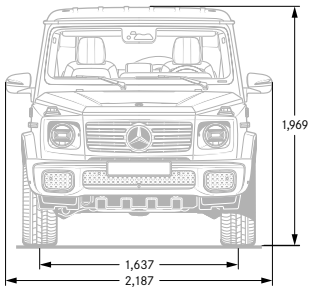

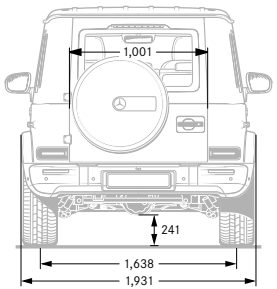

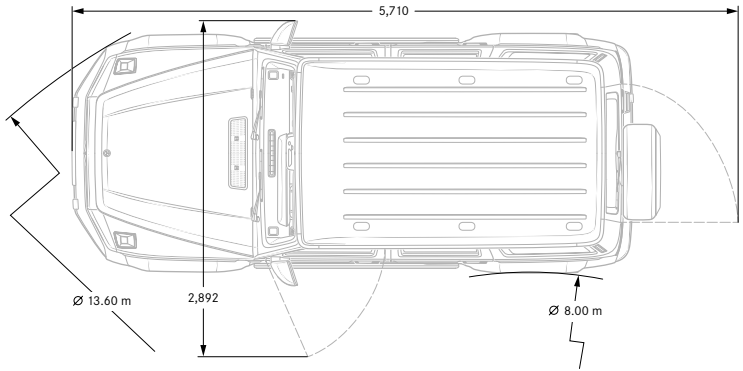

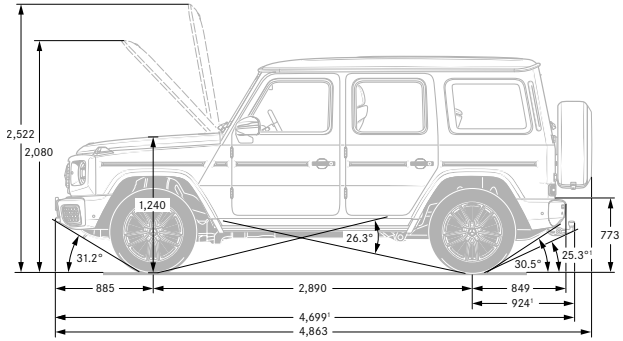

Mercedes-AMG G 63

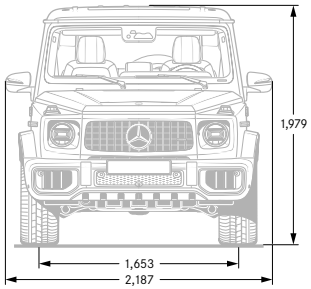

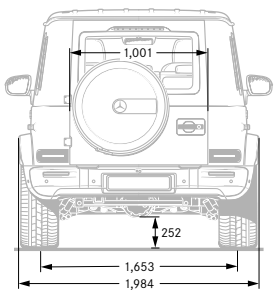

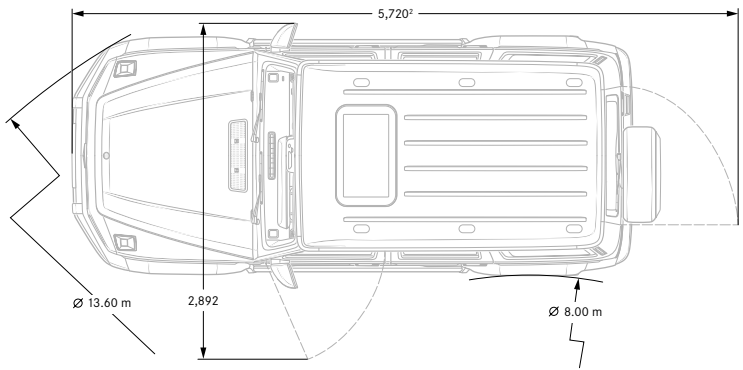

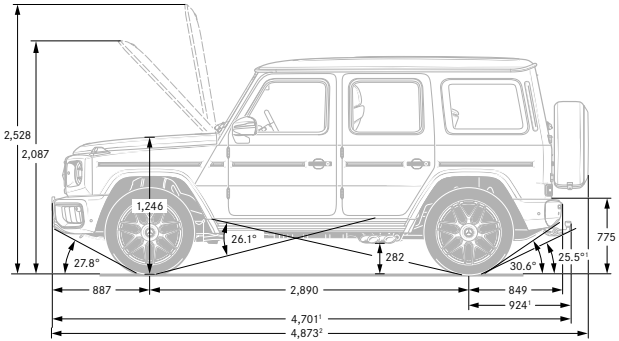

¹Incl. number-plate adapter (8 mm) ²Without number plate adapter (8 mm) ³Measured for an inclination of 14.4° ⁴With trailer tow hitch (optional equipment) All measurements in millimetres. The dimensions shown are mean values and apply to standard-specification, unladen vehicles

AMG Line Premium Plus – Boot capacity

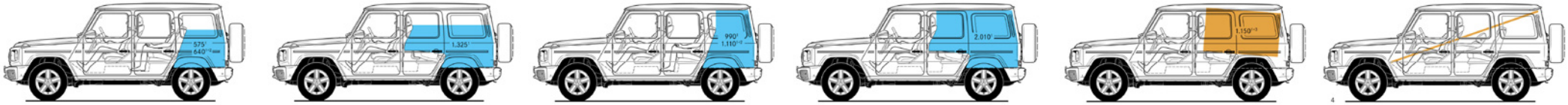

Mercedes-AMG G 63 – Boot capacity

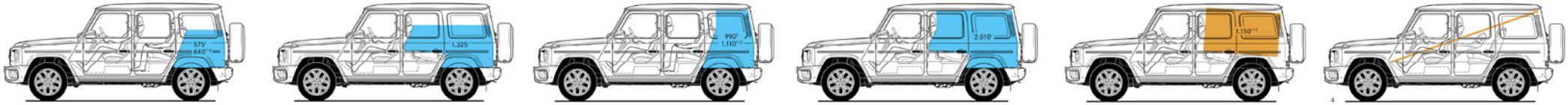

[1]Volume in litres [2]With backrest in cargo position [3]Largest cuboid: dimensions 1,420 × 960 × 850 mm, volume 1,150 litres [4]Longest board: dimensions 2,700 × 400 × 30 mm Luggage compartment capacity according to guideline ISO 3832:2002-06. Luggage compartment capacity may differ depending on optional extras
All measurements in millimetres. The dimensions shown are mean values and apply to standard-specification, unladen vehicles

Road Fund Licence

All road vehicle registrations are subject to Vehicle Excise Duty (Road Fund Licence), which varies in accordance with the vehicle's CO_2 emissions. A first year rate for each taxation band will apply. The table below shows the bands (A–M) created by the DVLA and the corresponding Road Fund Licence. CO_2 emissions and the relevant Excise Duty are shown on the model pricing pages.

Road fund licence rates for tax year 2026/27, effective from 1 April 2026

Band	CO_2 emissions (g/km)	First year rate (£)	Standard rate (£)	Premium rate (£)[1]
A	0	10.00	200.00	640.00
B	1 to 50	115.00	200.00	640.00
C	51 to 75	135.00	200.00	640.00
D	76 to 90	280.00	200.00	640.00
E	91 to 100	365.00	200.00	640.00
F	101 to 110	405.00	200.00	640.00
G	111 to 130	455.00	200.00	640.00
H	131 to 150	560.00	200.00	640.00
I	151 to 170	1,410.00	200.00	640.00
J	171 to 190	2,270.00	200.00	640.00
K	191 to 225	3,420.00	200.00	640.00
L	226 to 255	4,850.00	200.00	640.00
M	over 255	5,690.00	200.00	640.00



Some of the model features, optional extras and colours shown may not be available, or may only be available in a different specification, or at a different price
[1]Premium rate only applicable to vehicles where the list price is over £40,000 (or £50,000 for zero-emission electric vehicles), including any factory-fitted options, standard UK delivery charge and VAT

Services and insurance

Mercedes-Benz Service Plans

We believe that servicing and repair costs should be as flexible and affordable as possible for your G-Class, which is why we offer a choice of Service Plans to make it easy to budget for all your servicing, MOT and repair costs. It spreads your bills into manageable monthly payments based on whether you have a new or used Mercedes-Benz.

- **ServiceCare** – guarantees the price of parts and labour for up to four services and safeguards against any inflationary influences. It also covers your annual MOT fees depending on the age of your vehicle when you take your plan out.
- **CompleteCare** – our most comprehensive plan covering all your servicing, MOT, wear & tear needs as well as Extended Warranty once your vehicle turns four years old.
- **Extended Warranty** – protect yourself against sudden or unexpected repair costs after your initial warranty period has ended after three years. There are three policy options to choose from: 12-month, 24-month or a monthly pay-as-you-go option.

› Click here for more information

Motor Insurance

We know that once you have chosen your Mercedes-Benz you can't wait to drive it – that's why we created First Cover[1]. It gives you 5 days' free comprehensive Motor Insurance when you buy a new or used vehicle from a Mercedes-Benz Agent. We will also send you a quote for annual cover, so you can enjoy the same peace of mind all year round.

› Apply for First Cover

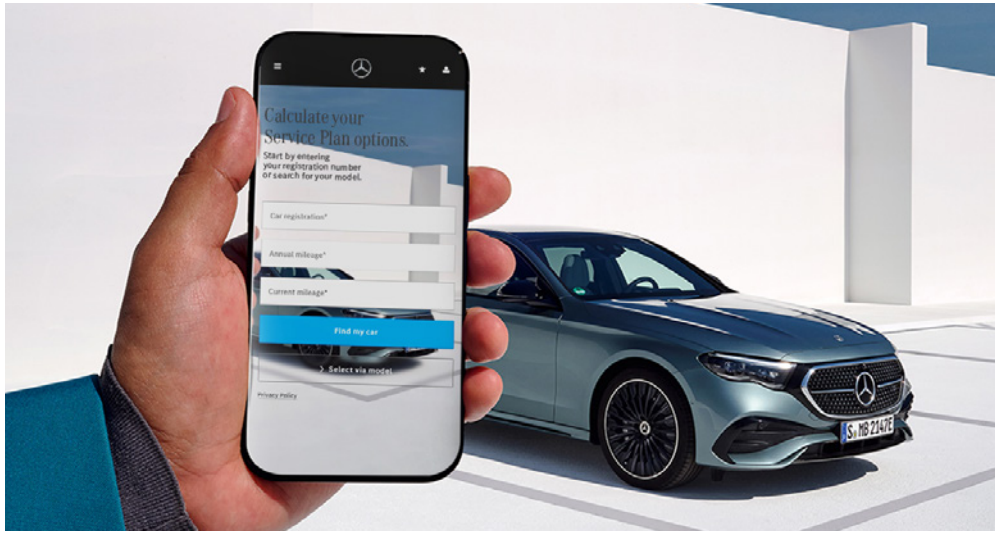

Battery Warranty

The battery is under warranty for either a maximum distance of 100,000 miles or up to eight years from the date of first registration, whichever comes first.

Warranty and breakdown cover

Every Mercedes-Benz comes with a three-year unlimited mileage warranty against manufacturing or material defects[2] and up to 30 years warranty against perforation due to corrosion from the inside out.[3] What's more, it's also covered by Mercedes-Benz Roadside Assistance – a unique package comprising up to 30 years pan-European breakdown assistance.[3]

[1]Terms and Conditions apply. We are an independent intermediary dealing with selected insurers in respect of annual insurance [2]Applies to vehicles sold by Mercedes-Benz in the UK to its franchised Mercedes-Benz Agents [3]Subject to full Terms and Conditions, dependent on date of registration, available upon request



Effective from July 2026 Production. Information correct at time of publication 11.06.2026.
Prices and specifications are subject to change without prior notice.
MBW465PL/0326 MY X25+056

Mercedes-Benz UK Limited, Delaware Drive, Tongwell, Milton Keynes, MK15 8BA. Company number: 02448457 www.mercedes-benz.co.uk