Mercedes-Benz

Mercedes-AMG GT Coupé

Model Year 807

From June 2026 production



140 YEARS OF INNOVATION

Some of the model features, optional extras and colours shown may not be available, or may only be available in a different specification, or at a different price. Costed option shown: Alpine Grey Solid [956].



Model Overview



Colours



Upholsteries & Trim



Wheels



Optional Equipment



Pricing



Standard Equipment



Technical Data



Further Information



Digital Extras



Services & Insurance



Roadside Assistance



Workplace EV Charging



Home Charging - Pod



MB.CHARGE Public



Online Showroom



Configurator



Genuine Accessories

Model Overview



43 Premium



43 Premium Plus



55 & 63 Premium



55 & 63 Premium Plus



PRO

Some of the model features, optional extras and colours shown may not be available, or may only be available in a different specification, or at a different price.



AMG 43 Premium

Some of the model features, optional extras and colours shown may not be available, or may only be available in a different specification, or at a different price. Option shown: High-Tech Silver Metallic [922].



AMG 55 & 63 Premium

Some of the model features, optional extras and colours shown may not be available, or may only be available in a different specification, or at a different price. Option shown: Selenite Grey Metallic [992].



Some of the model features, optional extras and colours shown may not be available, or may only be available in a different specification, or at a different price. Option shown: Nappa leather black [801A]


[1]


[2]


[3]


[4]

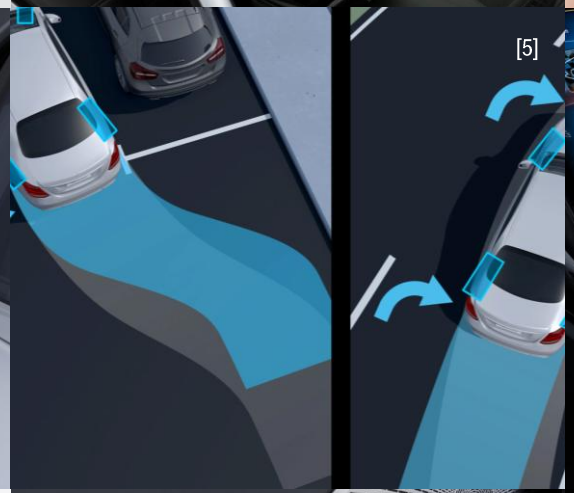
[5]


[6]

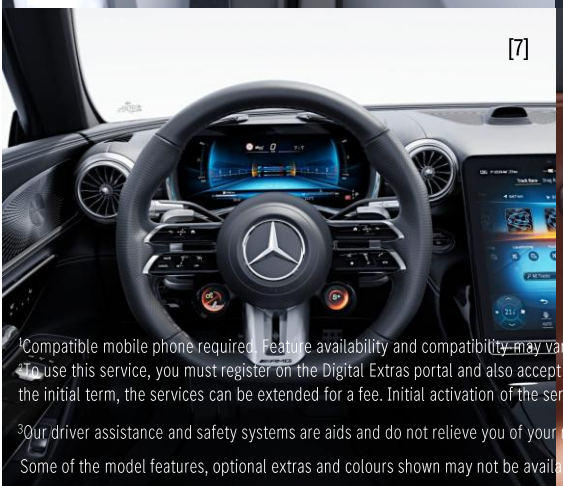
[7]


[8]


[9]

[1]Compatible mobile phone required. Feature availability and compatibility may vary by device, operating system and market.

[2]To use this service, you must register on the Digital Extras portal and also accept the Terms of Use for the Digital Extras service. In addition, the respective vehicle must be paired with the user account. Upon expiry of the initial term, the services can be extended for a fee. Initial activation of the services is possible within 1 year of first registration or commissioning by the customer, whichever comes first.

[3]Our driver assistance and safety systems are aids and do not relieve you of your responsibility as the driver. Please take note of the information in the Owner's Manual and the system limits described therein.

Some of the model features, optional extras and colours shown may not be available, or may only be available in a different specification, or at a different price.

Exterior Highlights

- 21" AMG wheels – 5-twin-spoke design, aerodynamically
- optimised, painted tantalite grey with a high-sheen finish [1]
- DIGITAL LIGHT
- AMG RIDE CONTROL suspension (43 only)
- AMG ACTIVE RIDE CONTROL suspension (55/63 only)
- AMG Night package
- Rear axle steering up to 2.5 degrees (55/63 only) [5]
- Panoramic fixed glass roof [2]

Interior Highlights

- Rear seats with folding backrests [3]
- Ambient lighting - 64 colours and 12 colour schemes
- THERMOTRONIC automatic climate control
- KEYLESS-GO with flush-fitting door handles [4]
- Memory seat package - memory function for seats, steering column, mirrors with 3 memory positions [8]
- Heated front seats
- Heated steering wheel
- AMG Performance steering wheel in nappa leather with AMG steering wheel buttons (43/55 only) [7]
- AMG Performance steering wheel in nappa leather/ MICROCUT microfibre with AMG steering wheel buttons (63 only)

Technology Highlights

- 11.9" central display with touch input and 12.3" fully digital driver display [6]
- Burmester® 3D surround sound system - 17 speakers and 4 exciters, 730-watt system output and Dolby Atmos®
- Smartphone integration via Android Auto™ or Apple CarPlay®[1,2]
- Wireless charging system for mobile devices in the front[1]
- Parking Package with 360 camera[2,3] [9]



AMG 43
Premium Plus

Some of the model features, optional extras and colours shown may not be available, or may only be available in a different specification, or at a different price. Option shown: Spectral Blue Metallic [970].



AMG 55 & 63 Premium Plus

Some of the model features, optional extras and colours shown may not be available, or may only be available in a different specification, or at a different price. Option shown: Obsidian Black Metallic [197].



Some of the model features, optional extras and colours shown may not be available, or may only be available in a different specification, or at a different price. Option shown: Nappa leather black [801A]













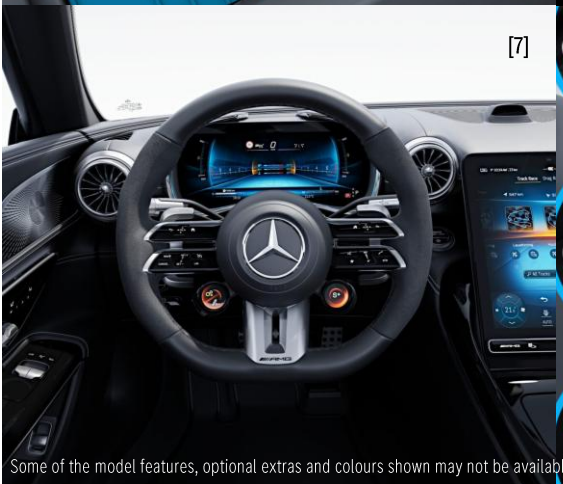



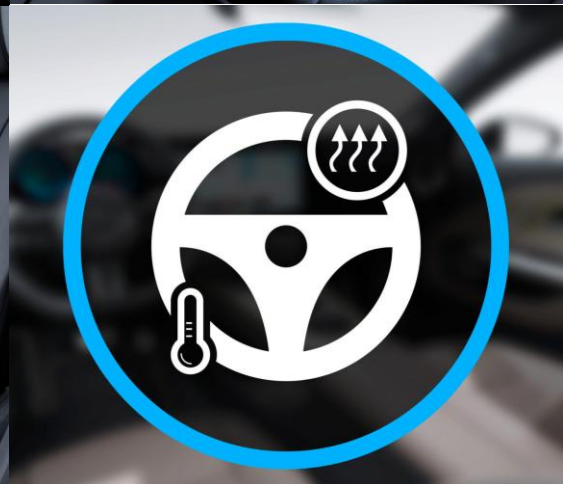

Exterior Highlights

- 21" AMG forged wheels – 5-twin-spoke design, painted matt black with a high-sheen rim flange [1]
- AMG Night Package II [2]
- AMG high-performance composite brake system with callipers painted in bronze (S E PERFORMANCE only)

Interior Highlights

- Head-up display
- MBUX augmented reality for navigation
- Climatised front seats - 3-stage seat ventilation and heating for a pleasant seat climate [5]
- Multicontour Seat Package with massage function pro in front [8]

Some of the model features, optional extras and colours shown may not be available or may only be available in a different specification, or at a different price.



AMG 63 PRO

Some of the model features, optional extras and colours shown may not be available, or may only be available in a different specification, or at a different price. Costed option shown: Alpine Grey Solid [956].



Some of the model features, optional extras and colours shown may not be available, or may only be available in a different specification, or at a different price. Option shown: Nappa leather black [801A].


[1]


[2]


[3]




[5]



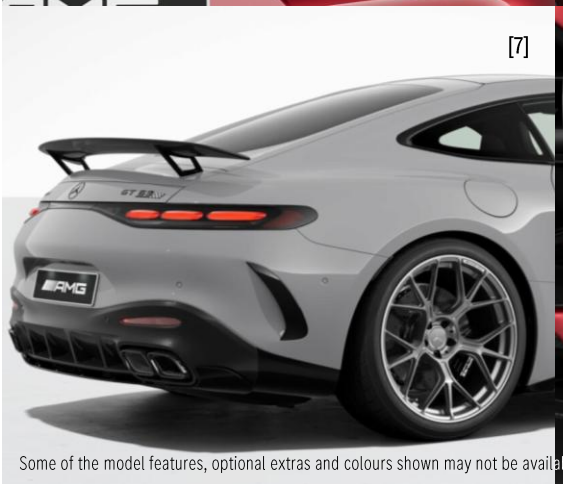
[7]


[8]


[9]

Some of the model features, optional extras and colours shown may not be available, or may only be available in a different specification, or at a different price.

Exterior Highlights

- 21" AMG forged wheels – cross-spoke design, painted himalaya grey matt [1]
- AMG electronic rear-axle limited-slip differential
- AMG high-performance ceramic brake system with callipers painted in black
- AMG Exterior Carbon package - design elements made of carbon-fibre, Inserts on the front splitter, Trim strip in the side sill panel, Rear diffuser, design elements in high-gloss black, Trim on the front wings Beltline and window line trim strips, Exterior mirror housing in carbon-fibre design, Twin tailpipe trim elements in black chrome [3,7,8]
- Fixed rear wing [2]

Interior Highlights

- AMG Performance steering wheel in carbon fibre design/ MICROCUT microfibre [9]
- ENERGIZING package
- Multicontour Seat package with electrically adjustable lumbar support
- AMG Performance seats [5]



Obsidian Black metallic
[197] – Standard



Selenite Grey metallic
[992] – No-cost option



Spectral Blue metallic
[970] – No-cost option



High-Tech Silver metallic
[922] – No-cost option



Sun Yellow non-metallic
[914] – No-cost option

Owing to limitations of on-screen representation, paint colours may differ from those shown.



Opalite White bright
[885] – £1,600



Patagonia Red bright
[993] – £1,600



Alpine Grey solid
[956] – £4,000



Spectral Blue magno
[593] – £6,300



Opalite White magno
[659] – £6,300



Hyper Blue magno
[964] – £6,300



AMG Green Hell magno
[376] – £7,795

Owing to limitations of on-screen representation, paint colours may differ from those shown.



MANUFAKTUR exclusive paints

Crafted with meticulous attention to detail, MANUFAKTUR's exclusive paint finishes elevate the AMG GT Coupé with exceptional craftsmanship and the highest level of personalisation, offering colours as individual as their owner. These bespoke exterior choices transform the AMG GT Coupé into a truly unique expression of personal style and refined luxury.

Explore our configurator or speak to your local Mercedes-Benz Agent to view all MANUFAKTUR exclusive paint finish options. Please note that vehicles ordered with MANUFAKTUR exclusive paint may require a longer lead time, your local Mercedes-Benz Agent can provide full details.

Available on all models – £10,200 inc. VAT

Owing to limitations of on-screen representation, paint colours may differ from those shown.

Some MANUFAKTUR options and combinations may not be available on all purchase or lease products. Please check availability with your Mercedes-Benz Agent. Vehicles with MANUFAKTUR paint or nappa leather may require a longer lead time. Please speak to your Mercedes-Benz Agent for further information.

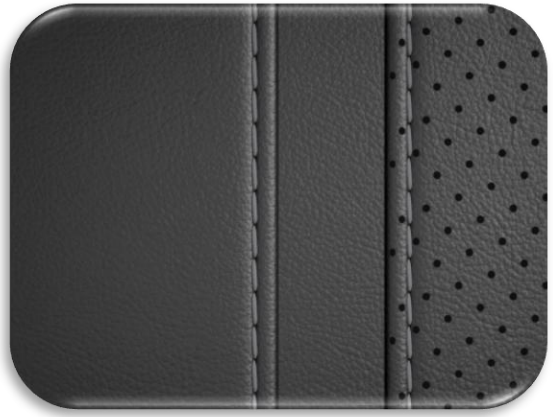

Nappa leather black
[801A] – Standard



Nappa leather sienna brown/black
[804A] – No-cost option



Nappa leather red pepper/black
[807A] – No-cost option



Nappa leather sage grey/black
[808A] – No-cost option



MANUFAKTUR Nappa leather truffle brown
[824A] – No-cost option

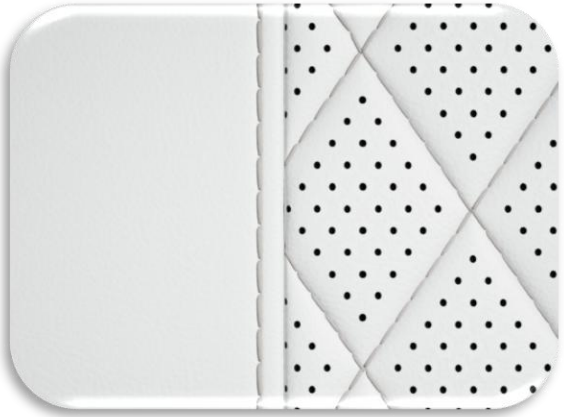

MANUFAKTUR Nappa leather crystal white/black
[825A] – No-cost option

✔ indicates standard equipment, ○ indicates optional at no extra cost, – indicates not available, and ● indicates a cost option. Price indicates optional at the cost shown. Prices shown inclusive of VAT.



Black piano-lacquer look trim [H80]

Premium	✔
Premium Plus	-
PRO	-

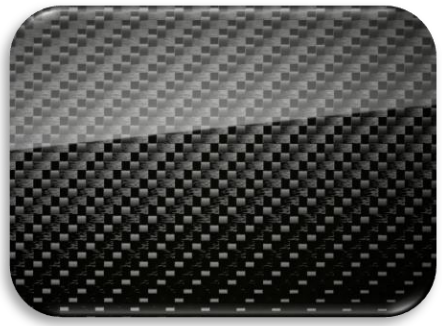

AMG carbon fibre trim [H73]

Premium	-
Premium Plus	✔
PRO	✔



Open-pore grey birch wood trim [H97]

Premium	-
Premium Plus	○
PRO	○



Ship's deck open-pore brown ash wood with aluminium lines trim [H98]

Premium	-
Premium Plus	○
PRO	○

✔ indicates standard equipment, ○ indicates optional at no extra cost, - indicates not available, and ● indicates a cost option. Price indicates optional at the cost shown. Prices shown inclusive of VAT.



21'' AMG forged wheels – 5-twin-spoke design, aerodynamically optimised, painted tantalite grey with a high-sheen finish [RWI]

Premium	✔
Premium Plus	○
PRO	-



21'' AMG forged wheels – 5-twin-spoke design, aerodynamically optimised, painted matt black with a high-sheen rim flange [RWK]

Premium	£670
Premium Plus	✔
PRO	-



21'' AMG forged wheels – cross-spoke design, painted himalaya grey matt [RWJ]

Premium	-
Premium Plus	-
PRO	✔



21'' AMG forged wheels – cross-spoke design, painted matt black with a high-sheen rim flange [RWL][1]

Premium	£670
Premium Plus	£670
PRO	○



21'' AMG forged wheels – 10-twin-spoke design, painted himalayas grey with a high-sheen finish [RWD]

Premium	£410
Premium Plus	○
PRO	-



21'' AMG forged wheels – 10-twin-spoke design, painted matt black with a high-sheen rim flange [RWE]

Premium	£1,000
Premium Plus	○
PRO	-



21'' AMG forged wheels – cross-spoke design, MANUFAKTUR version painted in matt techgold with high-sheen rim flange [RWM][1]

Premium	£1,185
Premium Plus	£1,185
PRO	-

[1]Not available with 43.

✔ indicates standard equipment, ○ indicates optional at no extra cost, - indicates not available, and ● indicates a cost option. Price indicates optional at the cost shown. Prices shown inclusive of VAT.



Driving Assistance Package[1] [P20]

£2,500

The Driving Assistance Package1 consists of:

- Active Distance Assist DISTRONIC[1]
- Active Speed Limit Assist[1]
- Active Stop-and-Go Assist[1]
- Active Steering Assist with hands-off warning[1]
- Active Lane Change Assist[1]
- Active Emergency Stop Assist[1]
- Active Brake Assist with vehicle, bicycle and pedestrian detection[1]
- Evasive Steering Assist with bicycle, pedestrian and vehicle detection[1]
- Exit Warning Function[1]

The Driving Assistance package[1] contains a range of highly intelligent features to help you stay safe on the road – by making the drive more effortless, by warning of danger, and by taking steps to protect you in an emergency.

Premium	•
Premium Plus	•
PRO	•

✔ indicates standard equipment, ○ indicates optional at no extra cost, – indicates not available, and ● indicates a cost option. Price indicates optional at the cost shown. Prices shown inclusive of VAT.

[1]Our driver assistance and safety systems are aids and do not relieve you of your responsibility as the driver. Please take note of the information in the Owner's Manual and the system limits described therein.

Some of the model features, optional extras and colours shown may not be available, or may only be available in a different specification, or at a different price. Optional equipment may change the CO_2, energy consumption or range value. Please check your desired specification on the online configurator.





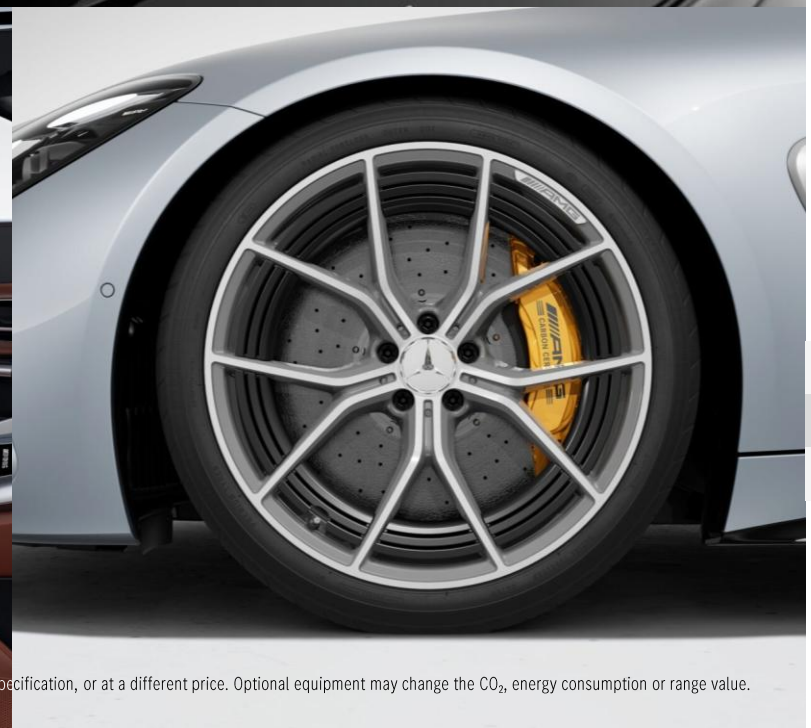

Ultimate Package[1] [DPU]

£5,000 – S E PERFORMANCE Premium Plus only

£11,000 – AMG 55/63 Premium Plus only

The Ultimate Package[1] consists of:

- AMG Aerodynamics package
- AMG high-performance ceramic composite braking system[2]
- AMG Performance seats
- Multicontour Seat package

Take your AMG experience to the next level with the Ultimate Package. Experience sharper, more dynamic handling with the AMG Aerodynamics package, designed for stability and control. Command maximum support with AMG Performance seats, holding you firmly in place through every corner. Make a strong statement with the AMG high-performance ceramic composite braking system, further enhancing driving dynamics and delivering uncompromising braking power.

Premium	–
Premium Plus	●
PRO	–

[1]ENERGIZING package replaces ENERGIZING package Plus.
[2]Standard on Mercedes-AMG GT 63 S E PERFORMANCE Premium Plus.
Some of the model features, optional extras and colours shown may not be available, or may only be available in a different specification, or at a different price. Optional equipment may change the CO_2, energy consumption or range value. Please check your desired specification on the online configurator.

✔ indicates standard equipment, ○ indicates optional at no extra cost, – indicates not available, and ● indicates a cost option. Price indicates optional at the cost shown. Prices shown inclusive of VAT.



AMG DYNAMIC PLUS Package [P71]

£4,000 – Only available with AMG 43

Standard on all AMG 55/63[1] models

The AMG DYNAMIC PLUS Package consists of:

- Active aerodynamic profile made of carbon fibre
- AMG brake callipers painted in yellow
- AMG dynamic engine mounts
- AMG electronic rear axle locking differential
- RACE drive program
- Suspension lowered by 10 mm

Unleash pure motorsport feeling with the AMG DYNAMIC PLUS Package. This package delivers enhanced vehicle dynamics through high-performance components. The active aerodynamic profile made of carbon fibre optimises airflow for stability at speed, while the suspension, lowered by 10 mm, sharpens agility and road holding. AMG dynamic engine mounts and the AMG electronic rear axle locking differential deliver precise response and superior traction out of corners. Command uncompromising performance with the "Race" drive programme, offering a focused drive set-up for the track. Make a strong statement with striking yellow-painted AMG brake callipers[1], highlighting the high performance and exclusive value of your braking system.

Premium	•
Premium Plus	•
PRO	–

✔ indicates standard equipment, ○ indicates optional at no extra cost, – indicates not available, and ● indicates a cost option. Price indicates optional at the cost shown. Prices shown inclusive of VAT.

[1]Mercedes-AMG GT 63 S E PERFORMANCE comes with ceramic brake callipers in bronze.

Some of the model features, optional extras and colours shown may not be available, or may only be available in a different specification, or at a different price. Optional equipment may change the CO_2, energy consumption or range value. Please check your desired specification on the online configurator.



Black-painted brake callipers [4U4][1] / Black-painted brake callipers for high-performance ceramic brake system [4U8][2]

£700

The black-painted brake callipers consists of:

- Black-painted brake callipers

Discreet and powerful: the black-painted brake callipers visualise the impressive performance of the AMG composite or AMG ceramic high-performance composite braking system. With their high-quality appearance, they lend the technology an exclusive aesthetic that combines sportiness with elegance.

Premium	●
Premium Plus	●
PRO	✔

[1]Only available with AMG Dynamic Plus package (code P71) for Mercedes-AMG GT 43.
[2]Only available with Ultimate package [DPU]. Not available for GT 43

Some of the model features, optional extras and colours shown may not be available, or may only be available in a different specification, or at a different price. Optional equipment may change the CO_2, energy consumption or range value. Please check your desired specification on the online configurator.

✔ indicates standard equipment, ○ indicates optional at no extra cost, – indicates not available, and ● indicates a cost option. Price indicates optional at the cost shown. Prices shown inclusive of VAT.



MANUFAKTUR decorative foliation black in AMG design with colour accent in brake calliper colour [U15][1]

£1,700

The MANUFAKTUR decorative foliation with colour accent in brake calliper colour consists of:

- Foiling with stripe design on bonnet, roof and rear as well as "AMG" lettering in the colour of the brake callipers [U15][1]

Premium	•
Premium Plus	•
PRO	•



MANUFAKTUR decorative foliation black in AMG design with colour accent in black [388][2]

£1,700

The MANUFAKTUR decorative foliation with colour accent in black consists of:

- Foiling with stripe design on the bonnet, roof and rear as well as "AMG" lettering in black [388][2]

Premium	•
Premium Plus	•
PRO	•

[1]Not in conjunction with codes 914U/970U/993U/593U/964U/376U/388.
[2]Not in conjunction with code U15.

Some of the model features, optional extras and colours shown may not be available, or may only be available in a different specification, or at a different price. Optional equipment may change the CO_2, energy consumption or range value. Please check your desired specification on the online configurator.

✔ indicates standard equipment, ○ indicates optional at no extra cost, – indicates not available, and ● indicates a cost option. Price indicates optional at the cost shown. Prices shown inclusive of VAT.



Omission of rear seats with folding backrests [DFB]

No-Cost Option

Pure two-seater focus: Without rear seats, the space behind you stays dedicated to luggage and storage. A fixed, uncluttered load area means there is nothing to fold and nothing to adjust.

Premium	○
Premium Plus	○
PRO	○

Some of the model features, optional extras and colours shown may not be available, or may only be available in a different specification, or at a different price. Optional equipment may change the CO_2, energy consumption or range value. Please check your desired specification on the online configurator.

✔ indicates standard equipment, ○ indicates optional at no extra cost, – indicates not available, and ● indicates a cost option. Price indicates optional at the cost shown. Prices shown inclusive of VAT.



MICHELIN PILOT SPORT CUP 2 R CUP TYRES [R03]

No-Cost Option

These sports tyres, specially developed for Mercedes-AMG, support you in adopting a particularly dynamic driving style. Depending on the surface and weather conditions, experience improved acceleration, higher cornering speeds and shorter braking distances – the basis for ambitious lap times on the racetrack.

Premium	–
Premium Plus	–
PRO	○

Some of the model features, optional extras and colours shown may not be available, or may only be available in a different specification, or at a different price. Optional equipment may change the CO_2, energy consumption or range value. Please check your desired specification on the online configurator.

✔ indicates standard equipment, ○ indicates optional at no extra cost, – indicates not available, and ● indicates a cost option. Price indicates optional at the cost shown. Prices shown inclusive of VAT.

Pricing

	Powertrain	CO2 WLTP [1]*	Basic RRP excl. VAT	Total RRP incl. VAT	Road Fund Licence [2]	Rec. OTR Price [3]	P11D Value	BIK Tax Rate 2026/27
Premium	Mercedes-AMG GT 43	235	£83,912.50	£100,695.00	£4,850	£106,405.00	£101,500.00	37%
	Mercedes-AMG GT 55 4MATIC+	319	£114,291.67	£137,150.00	£5,690	£143,700.00	£137,955.00	37%
	Mercedes-AMG GT 63 4MATIC+	319	£132,041.67	£158,450.00	£5,690	£165,000.00	£159,255.00	37%
Premium Plus	Mercedes-AMG GT 43	235	£88,995.83	£106,795.00	£4,850	£112,505.00	£107,600.00	37%
	Mercedes-AMG GT 55 4MATIC+	319	£119,375.00	£143,250.00	£5,690	£149,800.00	£144,055.00	37%
	Mercedes-AMG GT 63 4MATIC+	319	£137,125.00	£164,550.00	£5,690	£171,100.00	£165,355.00	37%
	Mercedes-AMG GT 63 S E PERFORMANCE	241	£151,708.33	£182,050.00	£4,850	£187,760.00	£182,855.00	16%
PRO	Mercedes-AMG GT 63 PRO 4MATIC+	319	£145,250.00	£174,300.00	£5,690.00	£180,850	£175,105.00	37%

[1] WLTP: Figures shown are for comparability purposes; only compare with other vehicles tested to the same technical procedures. Figures may not reflect real-life driving results, which depend on factory-fitted options, accessories fitted after registration, weather, driving style and vehicle load. Further information about the test used to establish fuel consumption and CO_2 figures can be found at https://www.mercedes-benz.co.uk/WLTP *Figures shown are for comparability purposes; only compare with other vehicles tested to the same technical procedures. Fuel consumption, CO_2, energy consumption and electric range figures are determined in accordance with WLTP. Actual results, including electric range, may vary depending on factors including battery charge, factory-fitted options, accessories fitted after registration, weather, driving style and vehicle load. Further information can be found at https://www.mercedes-benz.co.uk/WLTP [2] Vehicle Excise Duty: A different first-year rate for Vehicle Excise Duty (Road Fund Licence) applies to new cars. [3] Recommended on-the-road price: The recommended on-the-road price includes the Road Fund Licence applicable to the standard model plus delivery charge (£730.00 incl VAT), new vehicle registration fee (£55), fuel (£50.00 incl VAT) where applicable and number plates (£25.00 incl VAT). VAT is calculated at the standard rate of 20%.

	Premium	Premium Plus	PRO
Battery & Charging [S E PERFORMANCE only]			
4.8kWh lithium-ion battery (S E PERFORMANCE only)	-	✔	-
AC charging rated at 3.7kW (S E PERFORMANCE only)	-	✔	-
Charging Cable for wallbox/public 8M (S E PERFORMANCE only)	-	✔	-
Engine, Transmission & Suspension			
AMG SPEEDSHIFT MCT 9-speed sport automatic transmission	✔	✔	✔
AMG Ride Control Suspension (43 only)	✔	✔	-
AMG ACTIVE RIDE CONTROL suspension (55/63 only)	✔	✔	✔
AMG electronic rear-axle limited-slip differential (55/63)	✔	✔	✔
Lift system, front axle (63 only)	✔	✔	✔
AMG DYNAMIC PLUS package - "RACE" drive programme, AMG dynamic engine mounts, AMG rear axle locking differential electronic, Suspension lowering by 10 mm (55/63 only)	✔	✔	✔
AMG Track Pace	✔	✔	✔
AMG Real Performance Sound	✔	✔	✔
Rear-axle steering 2.5°(55/63 only)	✔	✔	✔
Exterior			
GT 43 exterior - AMG-specific radiator grille with vertical struts and central Mercedes star, GT 43-specific front apron with large air intakes across the vehicle width and striking A-wing design, narrower front and rear wings for a slimmer body profile, GT 43-specific rear apron with round twin tailpipe trims on the left and right, electrically extending rear spoiler	✔	✔	-
GT 55/63/63 e exterior - AMG-specific radiator grille with vertical struts and central Mercedes star, AMG front apron with large air intakes, sculpted bonnet with pronounced powerdomes, wide front and rear wings, AMG side sill panels, AMG-specific rear apron with diffuser and trapezoidal twin tailpipe trims on the left and right, electrically extending rear spoiler	✔	✔	-
GT 63 PRO exterior - AMG-specific radiator grille with vertical struts and central Mercedes star, PRO-specific AMG front apron with additional air deflectors in visible carbon fibre, front splitter, side sill trim strips, rear diffuser and fixed rear wing in carbon fibre, AIRPANEL active air control system and active aerodynamic underbody profile	-	-	✔
AMG Night package - Front splitter in high-gloss black, A-wing trim strip in high-gloss black, Front wing trim element in high-gloss black, Exterior mirror housing in high-gloss black, Side sill panel with trim strip in high-gloss black, Rear apron insert in high-gloss black, Twin tailpipe trims in black chrome	✔	✔	-
AMG Night package II- Radiator grille in black chrome, Typography on the front wings and rear in black chrome, Mercedes star at the rear in black chrome	-	✔	✔
AMG Exterior Carbon package - design elements made of carbon-fibre, Inserts on the front splitter, Trim strip in the side sill panel, Rear diffuser, Design elements in high-gloss black, Trim on the front wings Beltline and windowline trim strips, Exterior mirror housing in carbon-fibre design, Twin tailpipe trim elements in black chrome	-	-	✔

	Premium	Premium Plus	PRO
Exterior			
Active rear spoiler	✔	✔	-
Fixed rear wing	-	-	✔
EASY-ENTRY system with Remote boot lid	✔	✔	✔
Privacy glass - heat insulating dark-tinted glass	✔	✔	✔
Panoramic fixed glass roof	✔	✔	✔
Mirror package - electrically folding mirrors and automatically-dimming exterior driver's mirror and rear-view mirror	✔	✔	✔
KEYLESS-GO with flush-fitting door handles	✔	✔	✔
TIREFIT with tyre inflation compressor	✔	✔	✔
Vehicle socket flap (S E PERFORMANCE only)	✔	✔	✔
MAGIC VISION CONTROL	✔	✔	✔
Wheels			
21" AMG forged wheels – 5-twin-spoke design, aerodynamically optimised, painted tantalite grey with a high-sheen finish	✔	-	-
21" AMG forged wheels – 5-twin-spoke design, aerodynamically optimised, painted matt black with a high-sheen rim flange	-	✔	-
21" AMG forged wheels – cross-spoke design, painted himalaya grey matt	-	-	✔
AMG high-performance composite brake system	✔	✔	-
AMG ceramic high-performance composite brake system (S E PERFORMANCE/PRO only)	-	✔	✔
Silver painted AMG brake callipers (43 only)	✔	✔	-
Yellow painted AMG brake callipers (55/63 only)	✔	✔	-
Ceramic brake callipers painted in bronze (S E PERFORMANCE only)	-	✔	-
Ceramic brake callipers painted in black	-	-	✔
Summer tyres	✔	✔	✔

	Premium	Premium Plus	PRO
Interior			
Rear seats with folding backrests	✔	✔	✔
AMG illuminated door sills with "AMG" lettering and with exchangeable cover	✔	✔	✔
Ambient lighting - 64 colours and 12 colour schemes	✔	✔	✔
Automatically dimming interior mirror and driver's exterior mirror	✔	✔	✔
Load Compartment and Storage Package - Stainless steel loading sill protection, 12 V socket in the boot on the left, Boot mat	✔	✔	✔
THERMOTRONIC automatic climate control	✔	✔	✔
ENERGIZING package	-	-	✔
ENERGIZING package Plus	✔	✔	-
ENERGIZING AIR CONTROL (63 only)	✔	✔	✔
Heated front seats	✔	-	-
Climatised front seats - 3-stage seat ventilation and heating for a pleasant seat climate	-	✔	✔
Memory seat package - memory function for seats, steering column, mirrors and head up display (where fitted) with 3 memory positions	✔	✔	✔
Multicontour front seats with massage function	-	✔	-
Multicontour Seat package with electrically adjustable lumbar support	-	-	✔
4-way lumbar support	✔	-	-
AMG Performance seats	-	-	✔
Steering			
AMG performance steering wheel in nappa leather black (43/55 only)	✔	✔	-
AMG Performance steering wheel in nappa leather / MICROCUT microfibre (63 only)	✔	✔	-
AMG Performance steering wheel in carbon fibre design / MICROCUT microfibre	-	-	✔
AMG steering wheel buttons	✔	✔	✔
Electrically-adjustable steering column - height and reach	✔	✔	✔
Heated steering wheel	✔	✔	✔

	Premium	Premium Plus	PRO
Paint, Trim and Upholstery			
Metallic Paint	✔	✔	✔
MANUFAKTUR roof liner in black DINAMICA microfibre	✔	✔	✔
Black piano-lacquer look trim	✔	-	-
AMG carbon-fibre trim	-	✔	✔
Nappa leather black	✔	✔	✔
Safety and Assistance Systems			
Anti-theft alarm system with immobiliser and interior protection and preinstallation for collision detection	✔	✔	✔
Acoustic presence indicator	✔	✔	✔
Driver and front passenger airbags with extended adaptivity for front passenger airbag	✔	✔	✔
Automatic front passenger airbag deactivation	✔	✔	✔
Central airbag	✔	✔	✔
Kneebag for driver	✔	✔	✔
ISOFIX child seat attachment points with top tether in rear (two outer seats)	✔	✔	✔
Automatic child seat recognition sensor	✔	✔	✔
Status display in instrument cluster for rear seat belts	✔	✔	✔
Mercedes-Benz emergency call system [1]	✔	✔	✔
ATTENTION ASSIST - Monitors driver behaviour for tiredness and recommends when it is time for a break [2]	✔	✔	✔
Blind Spot Assist - Warns visually and audibly of threatening side collisions with other road users [2]	✔	✔	✔
Adaptive brake system with HOLD function and brake drying in the wet [2]	✔	✔	✔

[1]Mobile network and connected services: The connection of the communication module to the mobile phone network, including the emergency call system, depends on network coverage and the availability of network providers.
[2]The Driver assistance and safety systems: Our driver assistance and safety systems are aids and do not relieve you of your responsibility as the driver. Please take note of the information in the Owner's Manual and the system limits described therein.

✔ indicates standard equipment, ○ indicates optional at no extra cost, – indicates not available, and ● indicates a cost option. Price indicates optional at the cost shown. Prices shown inclusive of VAT.

Safety and Assistance Systems	Premium	Premium Plus	PRO
Electronic Stability Programme (ESP®) with Curve Dynamic Assist and Crosswind Assist - for greater driving safety and stability, in particular when accelerating on bends; counters understeer by one-sided braking action. Detects sudden, strong gusts of wind and helps the driver stay in lane by means of targetted braking [1]	✔	✔	✔
Tyre pressure monitoring system	✔	✔	✔
Electric parking brake	✔	✔	✔
Driver's fluorescent jacket	✔	✔	✔
Remote boot release	✔	✔	✔
Active Lane Keeping Assist - keeps the vehicle centered in its lane and provides steering intervention ensures the required course correction [1]	✔	✔	✔
Active Brake Assist [1]	✔	✔	✔
Active Parking Assist [1]	✔	✔	✔
Parking Package with 360 camera [1]	✔	✔	✔
Traffic Sign Assist [1]	✔	✔	✔
Exit warning function - alerts occupants to approaching traffic, cyclists or pedestrians when opening the doors [1]	✔	✔	✔
Congestion emergency brake function - detects potential rear-end collisions, automatically applying the brakes if the driver fails to respond [1]	✔	✔	✔
PRE-SAFE - reventive occupant protection, including PRE-SAFE® Sound, reversible belt tensioning and closing function for the side windows [1]	✔	✔	✔

[1]Driver assistance and safety systems: Our driver assistance and safety systems are aids and do not relieve you of your responsibility as the driver. Please take note of the information in the Owner's Manual and the system limits described therein.

✔ indicates standard equipment, ○ indicates optional at no extra cost, – indicates not available, and ● indicates a cost option. Price indicates optional at the cost shown. Prices shown inclusive of VAT.

	Premium	Premium Plus	PRO
Communication and In-Car Entertainment			
11.9" central display with touch input and 12.3" fully digital driver display	✔	✔	✔
Head-up display	-	✔	✔
Burmester® 3D surround sound system - 17 speakers and 4 exciters, 730-watt system output and Dolby Atmos®	✔	✔	✔
DAB digital radio tuner	✔	✔	✔
Hard-disc navigation - Includes 2D and 3D map display and route options such as Eco and Trailer	✔	✔	✔
MBUX Navigation Premium - Fast, networked navigation, including online route guidance, real-time traffic information and Car-to-X communication [1,2]	✔	✔	✔
MBUX augmented reality for navigation - Graphical navigation and traffic information merge with live images on the central display [1,2]	-	✔	✔
USB Package Plus - 2 USB-C ports in the front oddments tray, 2 USB-C ports under the centre armrest	✔	✔	✔
Wireless charging system for mobile devices in the front [3]	-	✔	✔
Smartphone integration via Android Auto™ or Apply CarPlay® [2,3]	✔	✔	✔
MBUX extended functions - available to use free of charge for three years following activation [1,2]	✔	✔	✔
Bluetooth interface [3]	✔	✔	✔
5G communications module [1]	✔	✔	✔
MBUX voice control activated by keywords "Hey Mercedes" [1]	✔	✔	✔
Preinstallation for Remote and Charging Services (E Performance only) [1,2]	-	✔	-
Remote Services Premium - You can locate your vehicle and control certain functions remotely [1,2]	✔	✔	✔
Pre-installation for MBUX Entertainment Plus - Fully integrated app store including music and video streaming services, games and productivity apps [1,2,3]	✔	✔	✔
Pre-installation for Live Traffic [1,2]	✔	✔	✔
Digital Services			
Digital Extras (standard services) - including emergency call system (eCall), accident recovery, breakdown and maintenance management [1,2]	✔	✔	✔
Digital Extras (vehicle set-up and monitoring) - onboard use of remote and location services e.g. geographic vehicle monitoring, vehicle location, remote door locking and unlocking, remote interrogation of vehicle status - available to use free of charge for three years following activation [1,2]	✔	✔	✔
GUARD 360° vehicle protection Plus with Digital Extras [1,2]	✔	✔	✔
Digital Extra: DIGITAL LIGHT projection function [1,2]	✔	✔	✔
Digital Extra: MBUX Entertainment 3 years [1,2]	✔	✔	✔
Digital Extra: MBUX Dashcam [1,2]	✔	✔	✔

[1]Mobile network and connected services: The connection of the communication module to the mobile phone network, including the emergency call system, depends on network coverage and the availability of network providers.

[2]Standard Digital Extras: To use this service, you must register on the Digital Extras portal and also accept the Terms of Use for the Digital Extras services. In addition, the respective vehicle must be paired with the user account. Upon expiry of the initial term, the services can be extended for a fee. Initial activation of the services is possible within 1 year of first registration or commissioning by the customer, whichever comes first.

[3]Compatible device: Compatible mobile phone required. Feature availability and compatibility may vary by device, operating system and market.

✔ indicates standard equipment, ○ indicates optional at no extra cost, - indicates not available, and ● indicates a cost option. Price indicates optional at the cost shown. Prices shown inclusive of VAT.

Optional Equipment

Optional equipment [1]			Premium	Premium Plus	PRO
Driving Assistance Package [2]	**P20**	**£2,500**	•	•	•
Active Distance Assist DISTRONIC [2]			^	^	^
Active Speed Limit Assist [2]			^	^	^
Active Stop-and-Go Assist [2]			^	^	^
Active Steering Assist with hands-off warning [2]			^	^	^
Active Lane Change Assist [2]			^	^	^
Active Emergency Stop Assist [2]			^	^	^
Active Brake Assist with vehicle, bicycle and pedestrian detection [2]			^	^	^
Evasive Steering Assist with bicycle, pedestrian and vehicle detection [2]			^	^	^
Exit Warning Function [2]			^	^	^
Ultimate Package - [55/63 only]	**DPU**	**£11,000**	•	•	-
AMG Aerodynamics Package - Front apron with flics on the air inlets and wheel arches in high gloss black, Rear apron with flics on the side air outlets in high gloss black, Diffuser attachment at the rear in high gloss black, AMG fixed rear wing in high gloss black			^	^	-
AMG ceramic high-performance composite brake system			^	^	-
AMG Performance Seat Package High-End with AMG Performance seats			^	^	-
ENERGIZING Package			^	^	-
Multicontour Seat package			^	^	-
Climatised front seats			^	✔	-
Ultimate Package -[S E PERFORMANCE only]	**DPU**	**£5,000**	-	•	-
AMG Aerodynamics Package - Front apron with flics on the air inlets and wheel arches in high gloss black, Rear apron with flics on the side air outlets in high gloss black, Diffuser attachment at the rear in high gloss black, AMG fixed rear wing in high gloss black			-	^	-
AMG Performance Seat Package High-End with AMG Performance seats			-	^	-
ENERGIZING Package			-	^	-
Multicontour Seat package			-	^	-

[1]Petrol / mild-hybrid models: Optional equipment may change the CO_2, energy consumption or range value. Please check your desired specification on the online configurator.. Please check your desired specification on the online configurator.

[2]Driver assistance and safety systems: Our driver assistance and safety systems are aids and do not relieve you of your responsibility as the driver. Please take note of the information in the Owner's Manual and the system limits described therein.

✔ indicates standard equipment, ○ indicates optional at no extra cost, - indicates not available, • indicates a cost option, and ^ indicates available as part of a package.

Optional Equipment

Optional equipment [1]			Premium	Premium Plus	PRO
AMG DYNAMIC PLUS Package - [43 only]	**P71**	**£4,000**	•	•	-
Active aerodynamic profile made of carbon fibre			^	^	-
AMG brake callipers painted in yellow			^	^	-
AMG dynamic engine mounts			^	^	-
AMG electronic rear axle locking differential			^	^	-
RACE drive programme			^	^	-
Suspension lowered by 10 mm			^	^	-
Omission of Rear seats with folding backrests	**DFB**	**non-cost**	○	○	○
Omission of rear seats with folding backrests			^	^	^
Black-painted brake callipers [2,3]	**4U4**	**£700**	•	•	-
Black-painted brake callipers for AMG high-performance composite brake system			^	^	-
Black-painted brake callipers for AMG ceramic high-performance composite brake system [4,5]	**4U8**	**£700**	•	•	✔
Black-painted brake callipers for AMG ceramic high-performance composite brake system			^	^	✔
MICHELIN PILOT SPORT CUP 2R CUP TYRES	**4U8**	**non-cost**	-	-	○
Sporty tyres, optimised for dynamic driving on dry roads			-	-	^
MANUFAKTUR decorative foliation black in AMG design with colour accent analogous to brake caliper colour [6]	**U15**	**£1,700**	•	•	•
Foiling with stripe design on bonnet, roof and rear as well as "AMG" lettering in the colour of the brake callipers			^	^	^
MANUFAKTUR decorative foliation black in AMG design with colour accent in black	**388**	**£1,700**	•	•	•
Foiling with stripe design on the bonnet, roof and rear as well as "AMG" lettering on the side skirts			^	^	^

[1]Petrol / mild-hybrid models: Optional equipment may change the CO_2, energy consumption or range value. Please check your desired specification on the online configurator. Please check your desired specification on the online configurator.
[2]Only available with AMG Dynamic Plus package (code P71) for Mercedes-AMG GT 43.
[3]Not available on S E PERFORMANCE.
[4]For GT 55 and 63, only available with Ultimate package (code DPU).
[5]Not available on GT 43.
[6]Not in conjunction with codes 914U/970U/993U/593U/964U/376U/388.

✔ indicates standard equipment, ○ indicates optional at no extra cost, - indicates not available, • indicates a cost option, and ^ indicates available as part of a package.

Optional Equipment

Optional equipment [1]			Premium	Premium Plus	PRO
Metallic Paint					
Obsidian Black metallic	197U	Standard	✔	✔	✔
High-Tech Silver metallic	922U	No-Cost Option	○	○	○
Selenite Grey metallic	992U	No-Cost Option	○	○	○
Sun Yellow non-metallic	914U	No-Cost Option	○	○	○
Spectral Blue metallic	970U	No-Cost Option	○	○	○
MANUFAKTUR Paint					
MANUFAKTUR Opalite White bright	885U	£1,600	•	•	•
MANUFAKTUR Patagonia Red bright	993U	£1,600	•	•	•
MANUFAKTUR Alpine Grey solid	956U	£4,000	•	•	•
MANUFAKTUR exclusive Paints (Please see configurator) [2]	-	£10,200	•	•	•
Magno Paint					
MANUFAKTUR Spectral Blue magno	593U	£6,300	•	•	•
MANUFAKTUR Opalite White magno	659U	£6,300	•	•	•
MANUFAKTUR Hyper Blue magno	964U	£6,300	•	•	•
AMG Green Hell magno	376U	£7,795	•	•	•
Upholstery					
Nappa leather black	801A	Standard	✔	✔	✔
Nappa leather sienna brown/black	804A	No-Cost Option	○	○	○
Nappa leather red pepper/black	807A	No-Cost Option	○	○	○
Nappa leather sage grey/black	808A	No-Cost Option	○	○	○
MANUFAKTUR Nappa leather truffle brown	824A	No-Cost Option	○	○	○
MANUFAKTUR Nappa leather crystal white/black	825A	No-Cost Option	-	○	○

[1]Petrol / mild-hybrid models: Optional equipment may change the CO_2, energy consumption or range value. Please check your desired specification on the online configurator. Please check your desired specification on the online configurator.
[2]MANUFAKTUR: Some MANUFAKTUR options and combinations may not be available on all purchase or lease products. Please check availability with your Mercedes-Benz Agent. Vehicles with MANUFAKTUR paint may require a longer lead time. Please speak to your Mercedes-Benz Agent for further information.

✔ indicates standard equipment, ○ indicates optional at no extra cost, **-** indicates not available, • indicates a cost option, and ^ indicates available as part of a package.

Optional Equipment

Optional equipment [1]			Premium	Premium Plus	PRO
Trim					
Black piano-lacquer look trim	H80	Standard	✔	-	-
AMG carbon-fibre trim	H73	Standard	-	✔	✔
Open-pore grey birch wood trim	H97	No-Cost Option	-	○	○
Ship's deck open-pore brown ash wood with aluminium lines	H98	No-Cost Option	-	○	○
Wheels					
21" AMG forged wheels – 5-twin-spoke design, aerodynamically optimised, painted tantalite grey with a high-sheen finish	RWI	Standard	✔	-	-
		No-Cost Option	-	○	-
21" AMG forged wheels – 5-twin-spoke design, aerodynamically optimised, painted matt black with a high-sheen rim flange	RWK	£670	•	-	-
		Standard	-	✔	-
21" AMG forged wheels – cross-spoke design, painted himalaya grey matt	RWJ	Standard	-	-	✔
21" AMG forged wheels – cross-spoke design, painted matt black with a high-sheen rim flange [Not available on 43]	RWL	£670	•	•	-
		No-Cost Option	-	-	○
21" AMG forged wheels – 10-twin-spoke design, painted himalayas grey with a high-sheen finish	RWD	£410	•	-	-
		No-Cost Option	-	○	-
21" AMG forged wheels – 10-twin-spoke design, painted matt black with a high-sheen rim flange	RWE	£1,000	•	-	-
		No-Cost Option	-	○	-
21" AMG forged wheels – cross-spoke design, MANUFAKTUR version painted in matt techgold with high-sheen rim flange [Not available on 43]	RWM	£1,185	•	•	-

[1]Petrol / mild-hybrid models: Optional equipment may change the CO_2, energy consumption or range value. Please check your desired specification on the online configurator. Please check your desired specification on the online configurator.

✔ indicates standard equipment, ○ indicates optional at no extra cost, - indicates not available, • indicates a cost option, and ^ indicates available as part of a package.

Technical Data

CO2 & Consumption Values							
Engine	Fuel Type	Transmission	Model Variant	CO2 Combined (g/km)[1], [2]	Fuel Consumption – combined (mpg)[1], [2]	Energy Consumption – combined (Wh/km)[1], [2]	EAER Electric Range (miles) [2, 3]
AMG GT 43	Petrol	Automatic	Premium	235	27.4	-	-
			Premium Plus	235	27.4	-	-
AMG GT 55 4MATIC+	Petrol	Automatic	Premium	319	20.2	-	-
			Premium Plus	319	20.2	-	-
AMG GT 63 4MATIC+	Petrol	Automatic	Premium	319	20.2	-	-
			Premium Plus	319	20.2	-	-
AMG GT 63 S E PERFORMANCE	Petrol Hybrid	Automatic	Premium Plus	241	26.7	372	7
AMG GT 63 PRO 4MATIC+	Petrol	Automatic	PRO	319	20.2	-	-

Wheels & Tyres [2]				
Model	Wheel Code	Description	Front	Rear
Premium	RWI	21" AMG 5-twin-spoke design, forged wheels aerodynamically optimised, painted in tantalite grey with a high-sheen finish	295/30 R21 tyres on 10.5J x 21 ET42	305/30 R21 tyres on 11J x 21 ET33 wheels
Premium Plus	RWK	21" AMG 5-twin-spoke design, forged wheels aerodynamically optimised, painted in matt black with a high-sheen rim flange	295/30 R21 tyres on 10.5J x 21 ET42	305/30 R21 tyres on 11J x 21 ET33
PRO	RWJ	21" AMG cross-spoke forged wheels painted matt Himalayas grey	295/30 R21 on 10.5J x 21 ET 42	305/30 R21 on 11J x 21 ET 33
Optional	RWL	21" AMG cross-spoke forged wheels painted in matt black with a high-sheen rim flange	295/30 R21 tyres on 10.5J x 21 ET42	305/30 R21 tyres on 11J x 21 ET33
Optional	RWD	21" AMG forged wheels in 10-twin-spoke design painted Himalayas grey with a high-sheen finish	295/30 R21 on 10.5J x 21 ET 42	305/30 R21 on 11J x 21 ET 33
Optional	RWE	21" AMG forged wheels in 10-twin-spoke design painted in matt black with a high-sheen rim flange	295/30 R21 tyres on 10.5J x 21 ET42	305/30 R21 tyres on 11J x 21 ET33
Optional	RWM	21" AMG forged wheels in cross-spoke design in MANUFAKTUR finish painted in matt tech gold with a high-sheen rim flange	295/30 R21 tyres on 10.5J x 21 ET42	305/30 R21 tyres on 11J x 21 ET33

[1]Petrol models: Figures shown are for comparability purposes; only compare with other vehicles tested to the same technical procedures. Figures may not reflect real-life driving results, which depend on factory-fitted options, accessories fitted after registration, weather, driving style and vehicle load. Further information about the test used to establish fuel consumption and CO_2 figures can be found at https://www.mercedes-benz.co.uk/WLTP

[2]PHEV models: Figures shown are for comparability purposes; only compare with other vehicles tested to the same technical procedures. Fuel consumption, CO_2, energy consumption and electric range figures are determined in accordance with WLTP. Actual results, including electric range, may vary depending on factors including battery charge, factory-fitted options, accessories fitted after registration, weather, driving style and vehicle load. Further information can be found at https://www.mercedes-benz.co.uk/WLTP

[3]Electric range: External factors such as weather, gradient and ambient temperature, and internal factors such as driving style, vehicle load and climate-control settings, can significantly affect electric range.

Technical Data

		Mercedes-AMG GT 43 Coupé	Mercedes-AMG GT 55 4MATIC+ Coupé	Mercedes-AMG GT 63 4MATIC+ Coupé	Mercedes-AMG GT 63 S E PERFORMANCE Coupé	Mercedes-AMG GT 63 PRO 4MATIC+ Coupé
Emissions						
Emissions standard		Euro 6 EB	Euro 6 EB	Euro 6 EB	Euro 6 EB	Euro 6 EB
Powertrain						
Powertrain		Petrol	Petrol	Petrol	Petrol Hybrid	Petrol
Gearbox		9 speed transmission	9 speed transmission	9 speed transmission	9 speed transmission	9 speed transmission
Drive type		4x2 (RWD)	4x4 (AWD)	4x4 (AWD)	4x4 (AWD)	4x4 (AWD)
Power [1]	hp (kW)	421 (310)	476 (350)	585 (430)	612+204 - total 816 (450+150 - total 600)	612 (450)
Torque [1]	Nm	500	700	800	850+320 - total 1,420	850
Powertrain						
Acceleration (0-62mph)	sec	4.6	3.9	3.2	2.8	3.2
Top speed	mph	174	183	196	199	197
Battery						
Battery type		-	-	-	Lithium-ion	-
Battery capacity (useable)	kWh	-	-	-	4.8	-
Battery warranty		-	-	-	6 years/62,000 Miles	-
Charging						
On-board charger (AC)	kW	-	-	-	3.7	-
Charging time - Home Wallbox 3.7kW AC [2]	25-100%	-	-	-	1hr30mins	-
Range						
Electric Range [3],[4]	miles	-	-	-	7	-
Electric energy consumption, combined [3],[5]	Wh/km	-	-	-	372	-
Weights & Capacities						
Kerb weight [6]	kg	1820-1847	1947-1988	1950-1991	2202-2223	1969-1977
Permissable gross vehicle weight	kg	2005	2160	2160	2365	2130
Boot capacity - seats up	litres	321	321	321	182	321
Maximum roof load	kg	NA	NA	NA	NA	NA

[1]Power: Figures according to Regulation UN ECE Regulation No. 85 in the currently applicable version.
[2]AC charging: Specified voltage and current values refer to network infrastructure and may be limited by the vehicle. Charging times are based on 25-100% using a 3.7 kW AC home wallbox under the stated test conditions. Actual charging time may vary.
[3]WLTP: Figures shown are for comparability purposes; only compare with other vehicles tested to the same technical procedures. Fuel consumption, CO_2, energy consumption and electric range figures are determined in accordance with WLTP. Actual results, including electric range, may vary depending on factors including battery charge, factory-fitted options, accessories fitted after registration, weather, driving style and vehicle load. Further information can be found at https://www.mercedes-benz.co.uk/WLTP
[4]Electric range: External factors such as weather, gradient and ambient temperature, and internal factors such as driving style, vehicle load and climate-control settings, can significantly affect electric range.
[5]Figures shown are for comparability purposes; only compare with other vehicles tested to the same technical procedures. Figures may not reflect real-life driving results, which depend on factory-fitted options, accessories fitted after registration, weather, driving style and vehicle load. Further information about the test used to establish fuel consumption and CO_2 figures can be found at https://www.mercedes-benz.co.uk/WLTP
[6]Kerb weight: Mass of the vehicle in running order with at least 90% full fuel tank, plus the mass of the driver (estimated by law at 75 kg), fuel and fluids, equipped with the standard equipment as specified by the manufacturer as well as, where applicable, the mass of the body, cab, trailer coupling and spare wheel(s) as well as tools. Optional extras, additional equipment and accessories can influence the weight, residual payload, rolling resistance, aerodynamics, etc., and therefore also affect the consumption/CO_2 values.

Technical Data - AMG 43

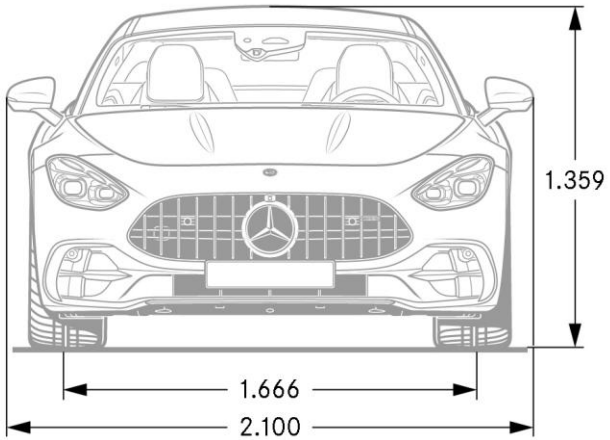

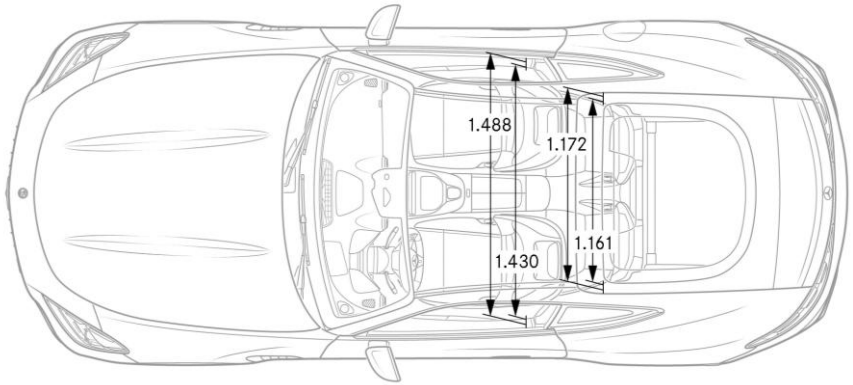

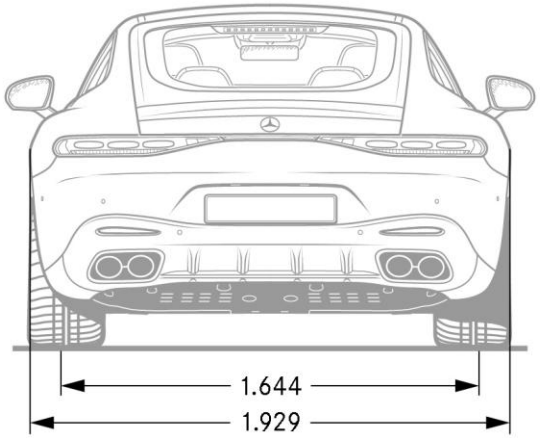

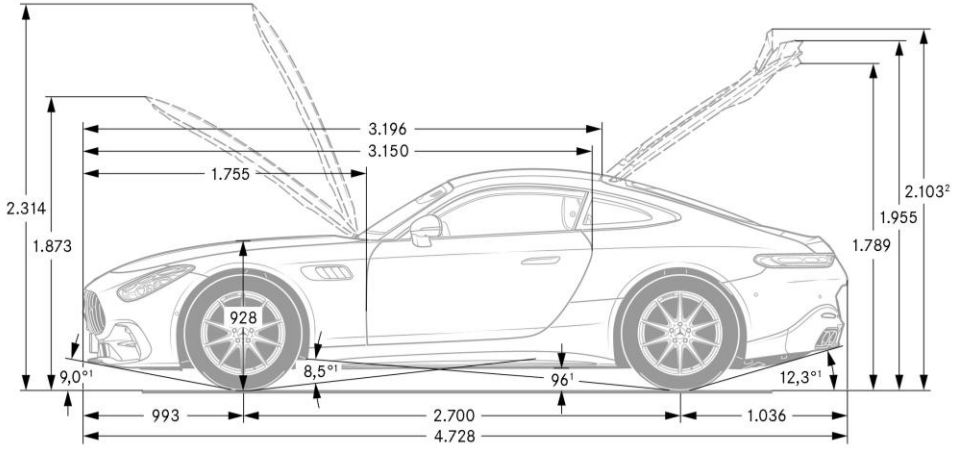

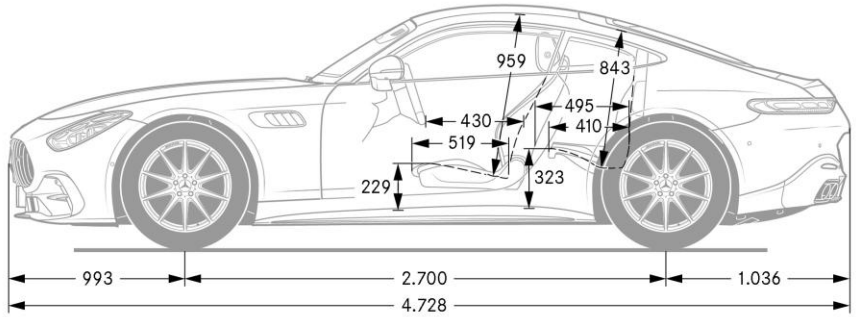

All measurements in millimetres. The dimensions shown are mean values and apply to standard specification, unladen vehicles.

Technical Data - AMG 55/63

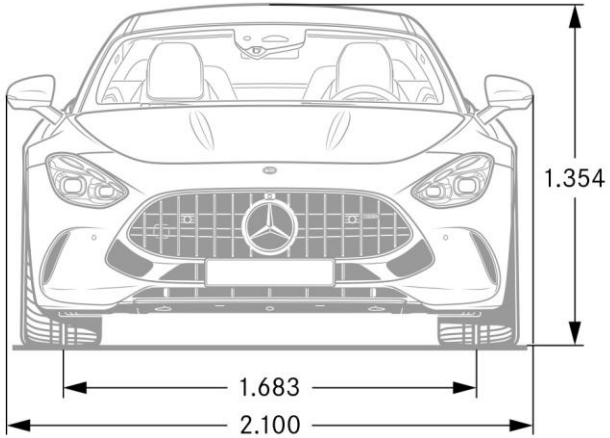

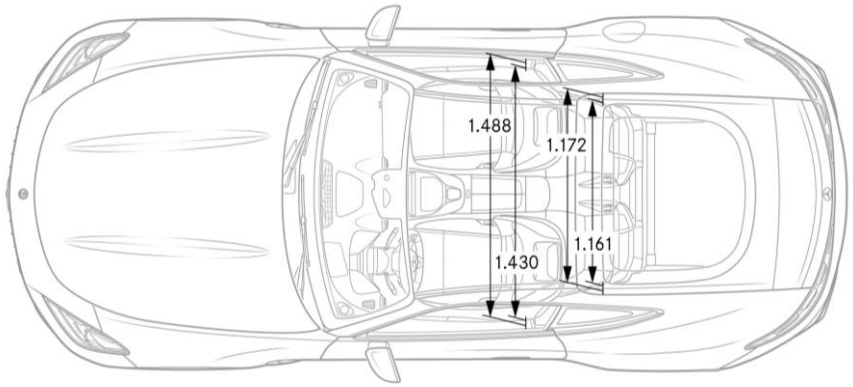

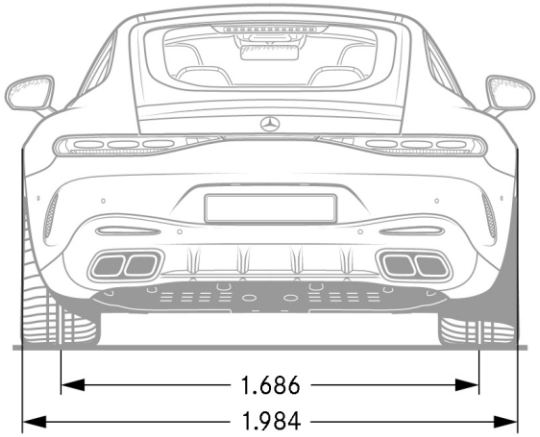

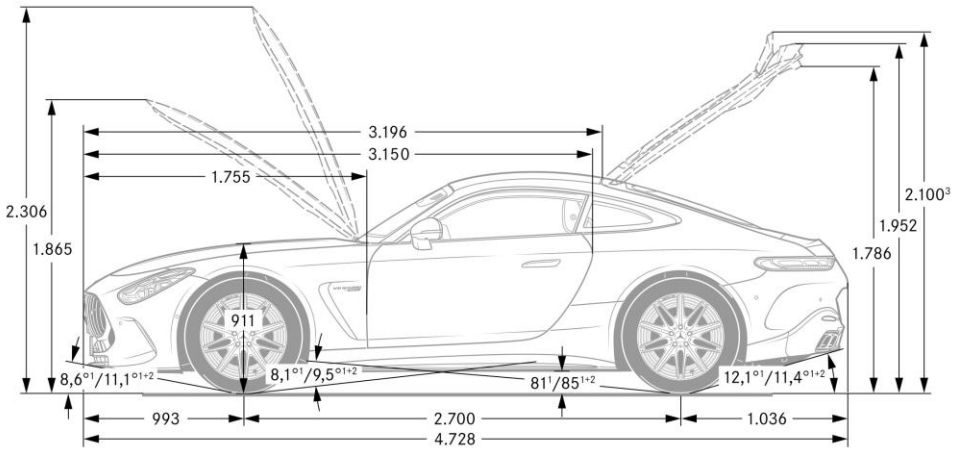

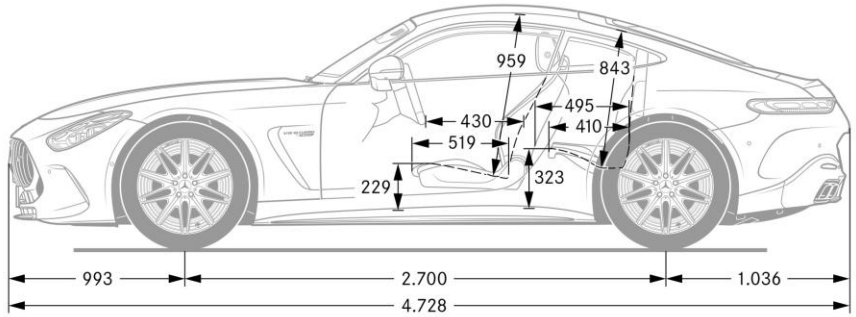

All measurements in millimetres. The dimensions shown are mean values and apply to standard specification, unladen vehicles.

Technical Data - AMG 63 PRO

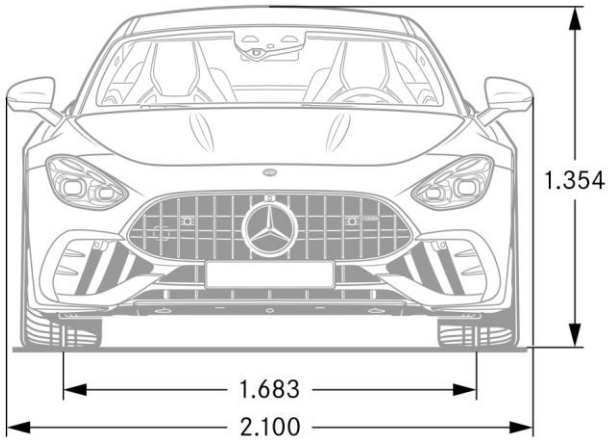

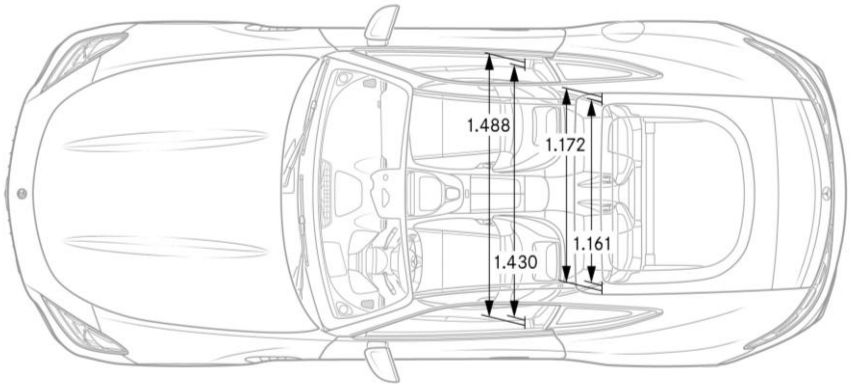

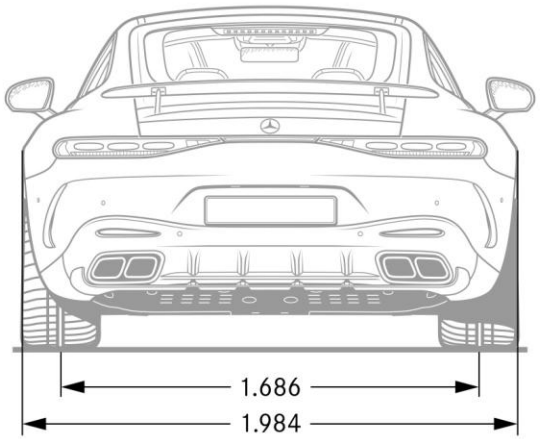

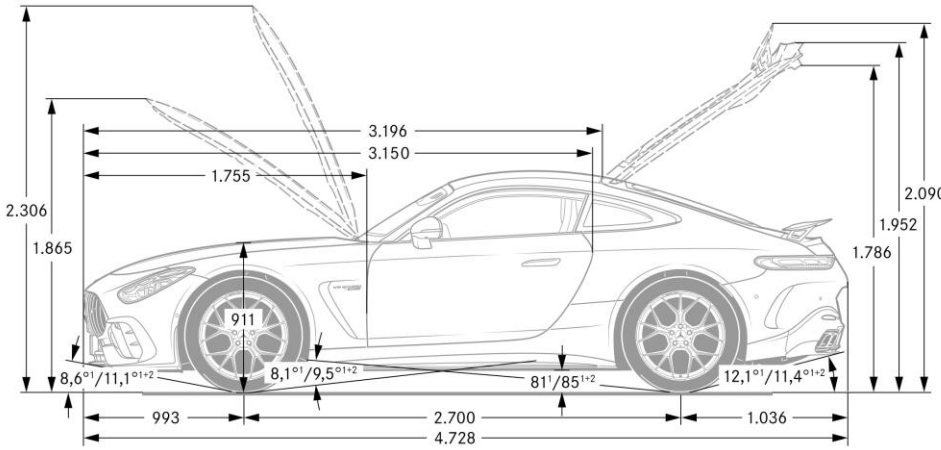

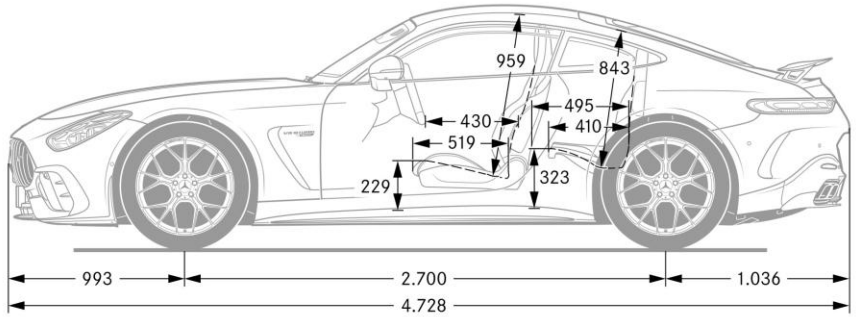

All measurements in millimetres. The dimensions shown are mean values and apply to standard specification, unladen vehicles.

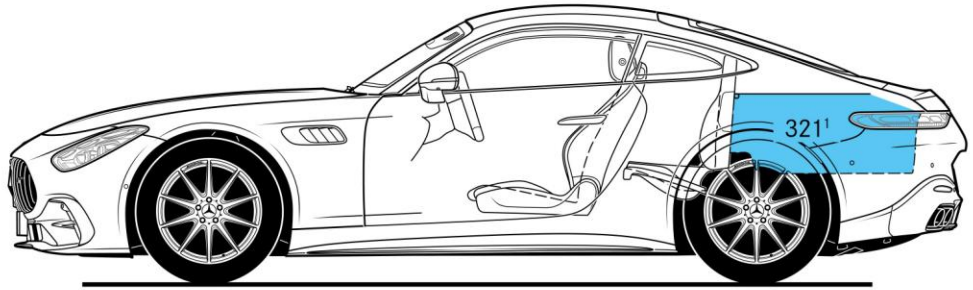

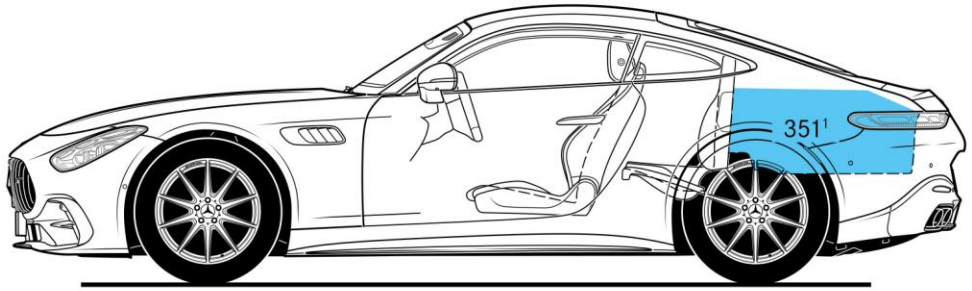

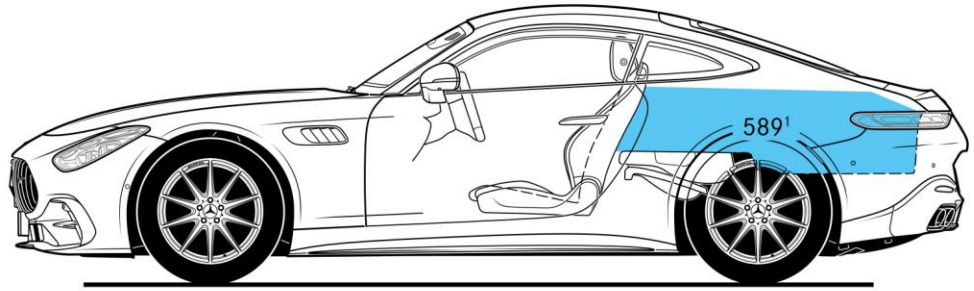

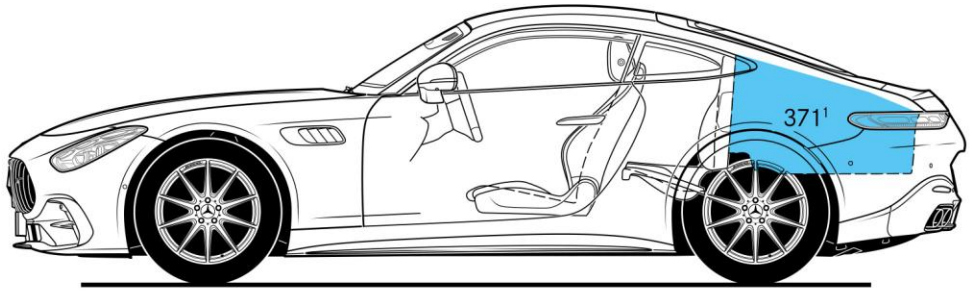

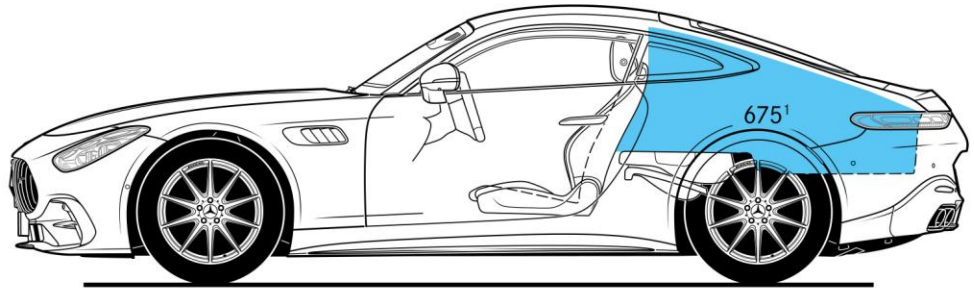

[1]All measurements in litres. The dimensions shown are mean values and apply to standard specification, unladen vehicles.

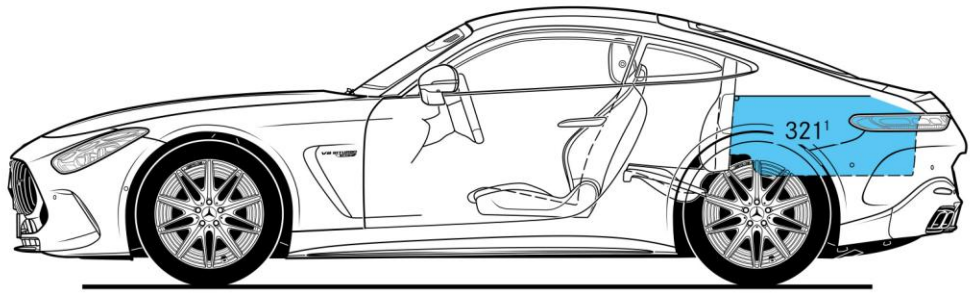

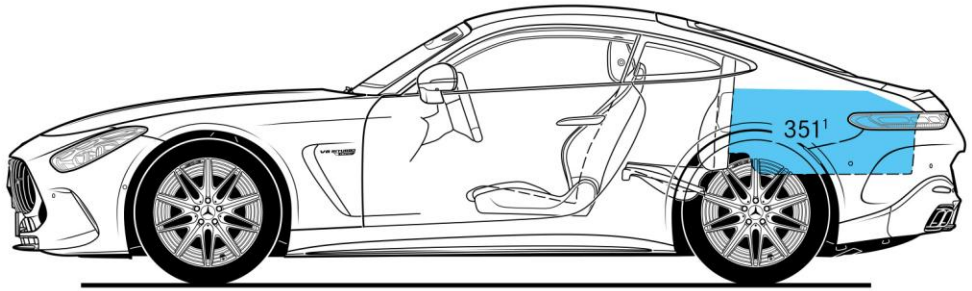

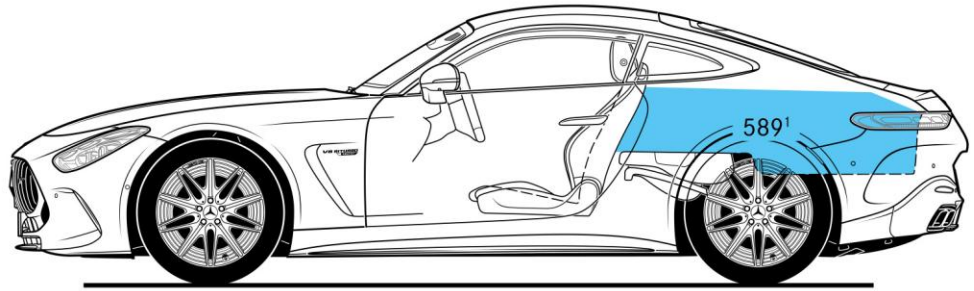

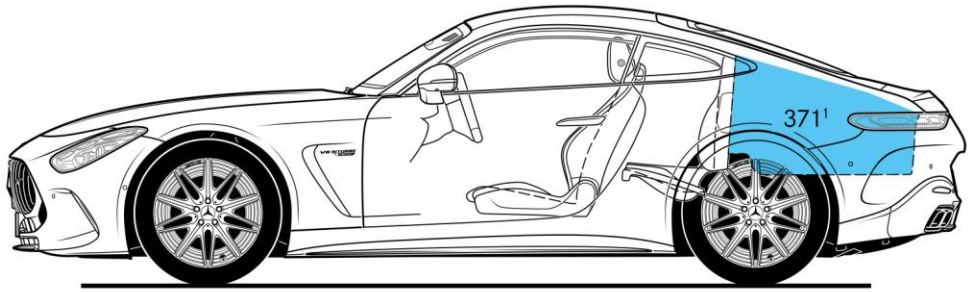

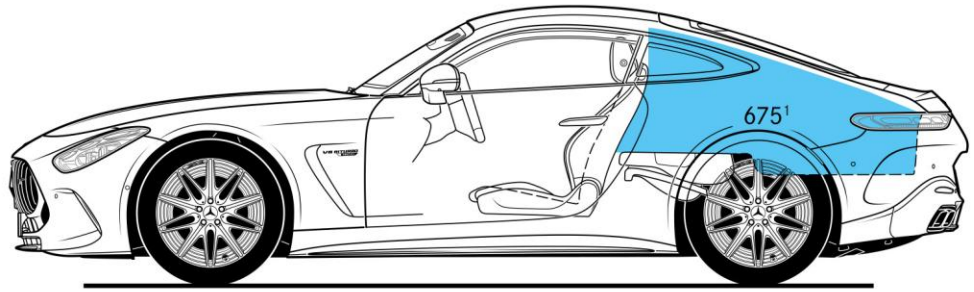

[1]All measurements in litres. The dimensions shown are mean values and apply to standard specification, unladen vehicles.

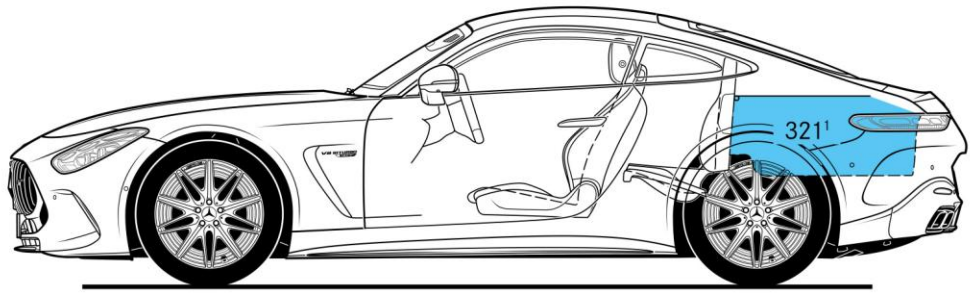

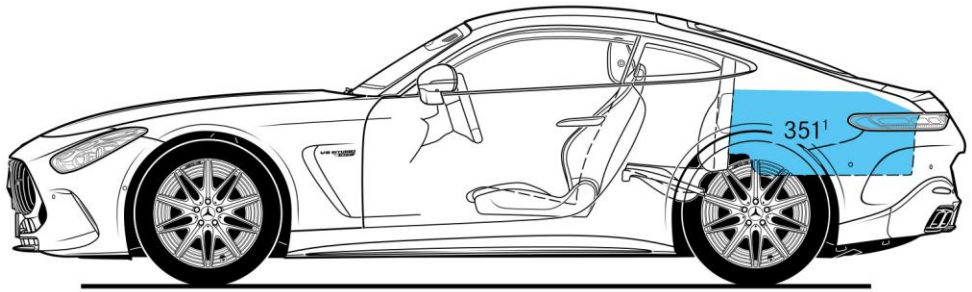

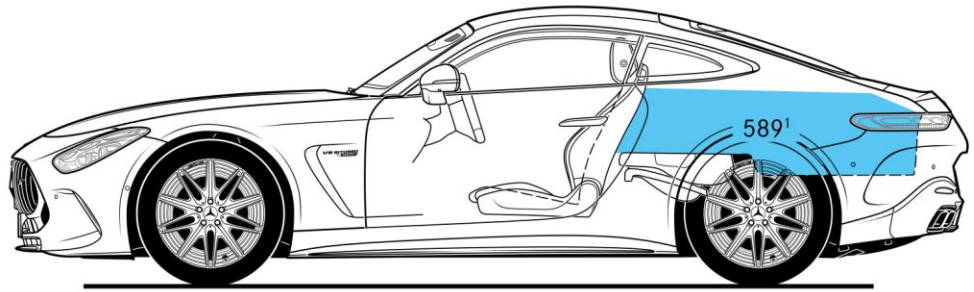

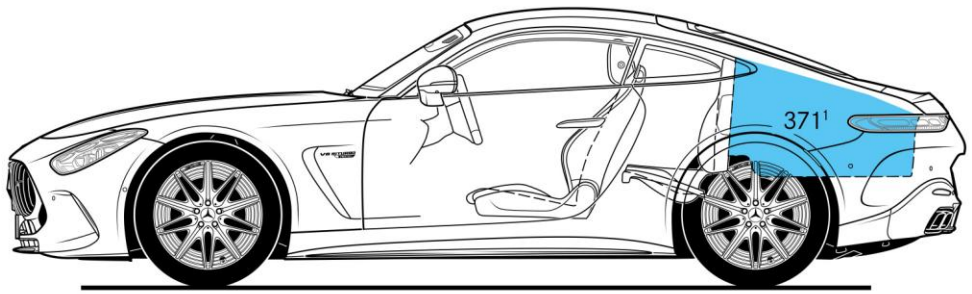

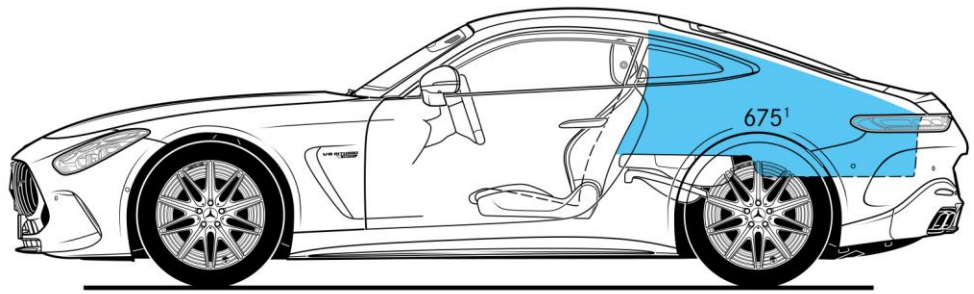

[1]All measurements in litres. The dimensions shown are mean values and apply to standard specification, unladen vehicles.

Technical Data - 63 S E PERFORMANCE

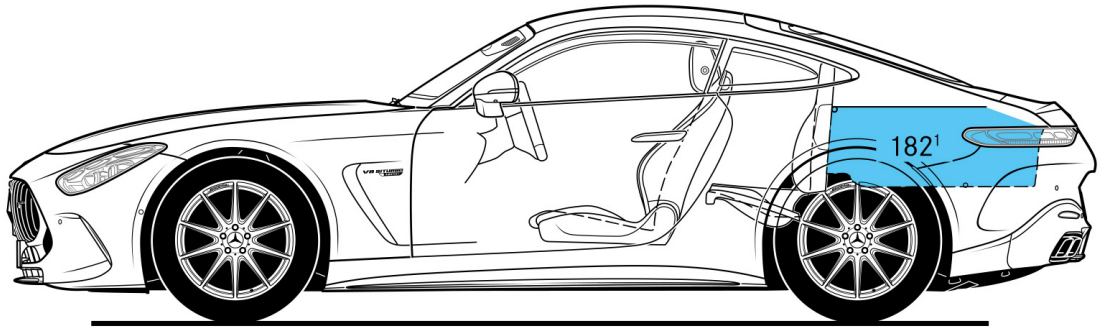

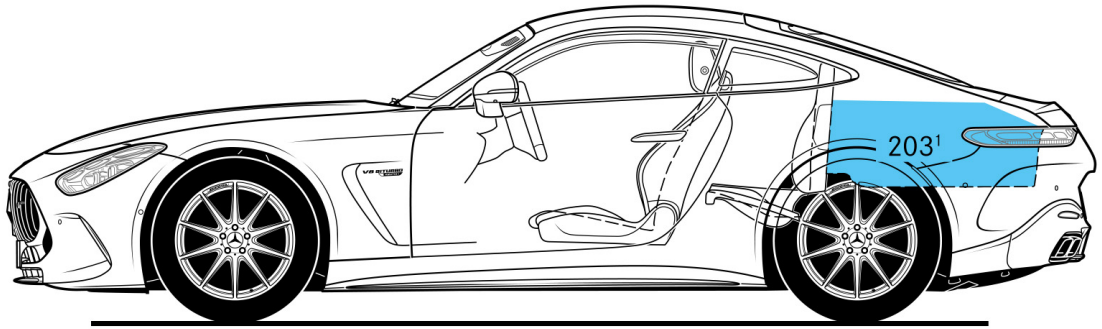

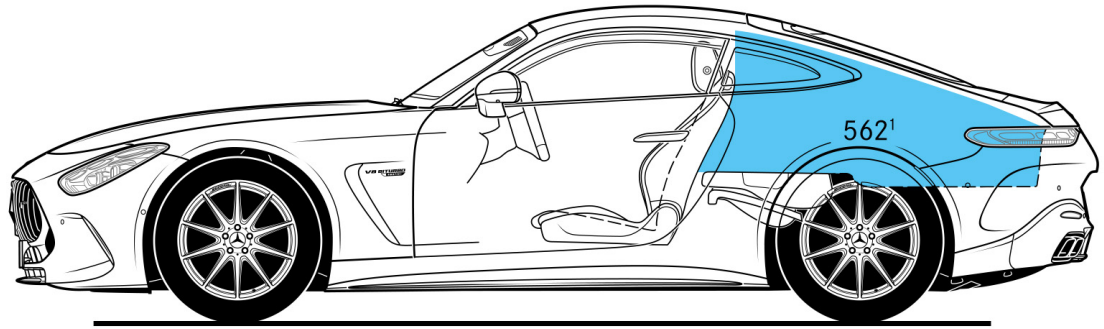

[1]All measurements in litres. The dimensions shown are mean values and apply to standard specification, unladen vehicles.

Technical Data - AMG 63 PRO

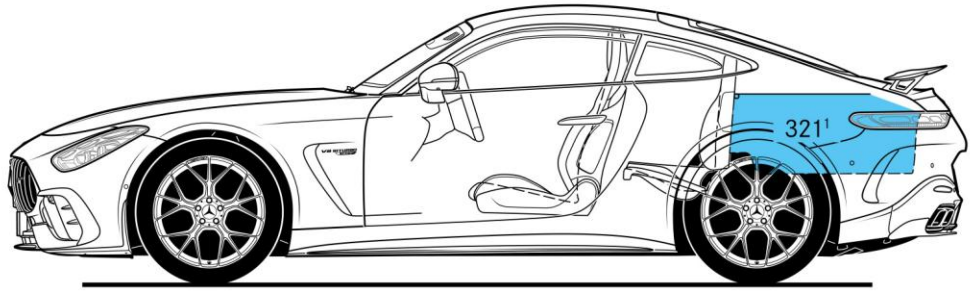

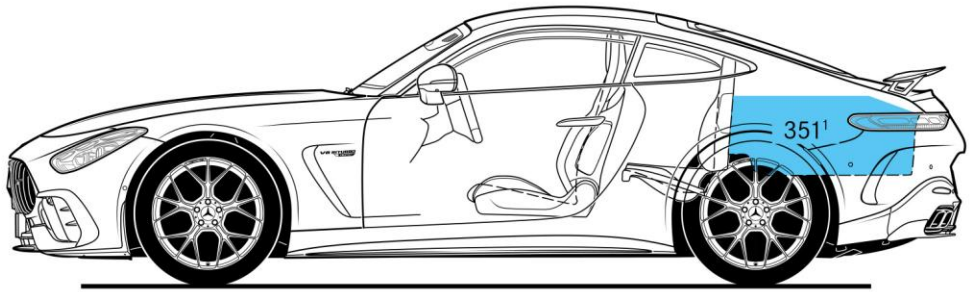

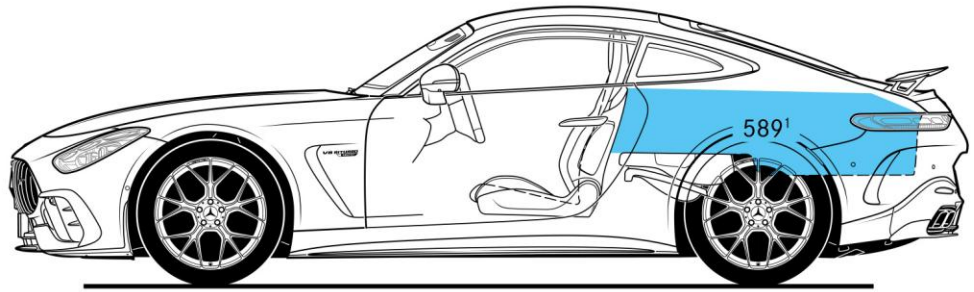

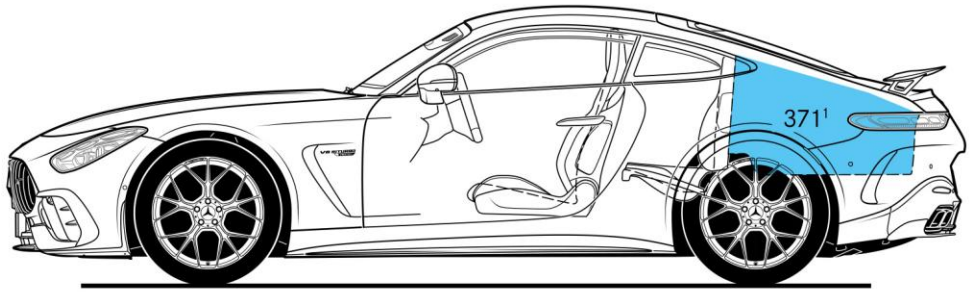

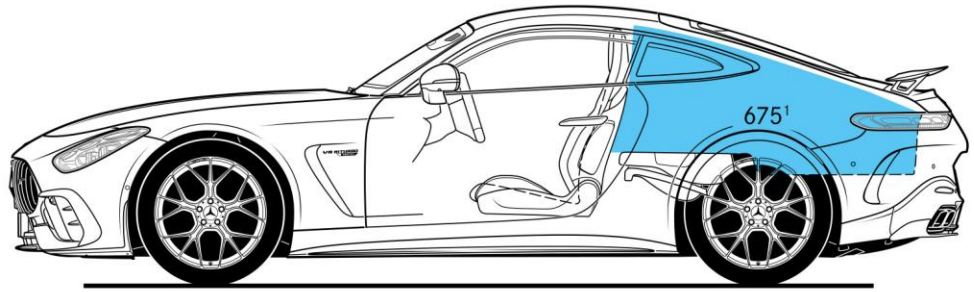

[1]All measurements in litres. The dimensions shown are mean values and apply to standard specification, unladen vehicles.

Technical Data

AMG GT Coupé														
Model Variant	Bodyshell	Fuel	WLTP CO2 Combined (g/km)	BIK Tax Rate	Kerb Weight (KG)	Combined (l/100km)	Combined (MPG)	W.Combined (l/100)	W.Combined (MPG)	Energy Consumption Combined (Wh/km)	EAER Electric Range KM	EAER Electric Range MILES	EAER City Range Combined KM	EAER City Range Combined MILES
AMG GT 43														
(C192) Mercedes-AMG GT 43 Premium	Coupé	Mild-Hybrid	235	37%	1826	10.3	27.4	-	-	-	-	-	-	-
(C192) Mercedes-AMG GT 43 Premium P20	Coupé	Mild-Hybrid	235	37%	1828	10.3	27.4	-	-	-	-	-	-	-
(C192) Mercedes-AMG GT 43 Premium P71	Coupé	Mild-Hybrid	235	37%	1839	10.3	27.4	-	-	-	-	-	-	-
(C192) Mercedes-AMG GT 43 Premium P20+P71	Coupé	Mild-Hybrid	235	37%	1840	10.3	27.4	-	-	-	-	-	-	-
(C192) Mercedes-AMG GT 43 Premium RWK (Premium)	Coupé	Mild-Hybrid	235	37%	1826	10.3	27.4	-	-	-	-	-	-	-
(C192) Mercedes-AMG GT 43 Premium RWK (Premium)+P20	Coupé	Mild-Hybrid	235	37%	1828	10.3	27.4	-	-	-	-	-	-	-
(C192) Mercedes-AMG GT 43 Premium RWK (Premium)+P71	Coupé	Mild-Hybrid	235	37%	1839	10.3	27.4	-	-	-	-	-	-	-
(C192) Mercedes-AMG GT 43 Premium RWK (Premium)+P20+P71	Coupé	Mild-Hybrid	235	37%	1840	10.3	27.4	-	-	-	-	-	-	-
(C192) Mercedes-AMG GT 43 Premium RWD (Premium)	Coupé	Mild-Hybrid	235	37%	1829	10.3	27.4	-	-	-	-	-	-	-
(C192) Mercedes-AMG GT 43 Premium RWD (Premium)+P20	Coupé	Mild-Hybrid	235	37%	1831	10.3	27.4	-	-	-	-	-	-	-
(C192) Mercedes-AMG GT 43 Premium RWD (Premium)+P71	Coupé	Mild-Hybrid	235	37%	1841	10.3	27.4	-	-	-	-	-	-	-
(C192) Mercedes-AMG GT 43 Premium RWD (Premium)+P20+P71	Coupé	Mild-Hybrid	235	37%	1843	10.3	27.4	-	-	-	-	-	-	-
(C192) Mercedes-AMG GT 43 Premium RWE (Premium)	Coupé	Mild-Hybrid	235	37%	1829	10.3	27.4	-	-	-	-	-	-	-
(C192) Mercedes-AMG GT 43 Premium RWE (Premium)+P20	Coupé	Mild-Hybrid	235	37%	1831	10.3	27.4	-	-	-	-	-	-	-
(C192) Mercedes-AMG GT 43 Premium RWE (Premium)+P71	Coupé	Mild-Hybrid	235	37%	1841	10.3	27.4	-	-	-	-	-	-	-
(C192) Mercedes-AMG GT 43 Premium RWE (Premium)+P20+P71	Coupé	Mild-Hybrid	235	37%	1843	10.3	27.4	-	-	-	-	-	-	-
(C192) Mercedes-AMG GT 43 Premium DFB	Coupé	Mild-Hybrid	235	37%	1820	10.3	27.4	-	-	-	-	-	-	-
(C192) Mercedes-AMG GT 43 Premium P20+DFB	Coupé	Mild-Hybrid	235	37%	1822	10.3	27.4	-	-	-	-	-	-	-
(C192) Mercedes-AMG GT 43 Premium P71+DFB	Coupé	Mild-Hybrid	235	37%	1832	10.3	27.4	-	-	-	-	-	-	-
(C192) Mercedes-AMG GT 43 Premium P20+P71+DFB	Coupé	Mild-Hybrid	235	37%	1834	10.3	27.4	-	-	-	-	-	-	-
(C192) Mercedes-AMG GT 43 Premium RWK (Premium)+DFB	Coupé	Mild-Hybrid	235	37%	1820	10.3	27.4	-	-	-	-	-	-	-
(C192) Mercedes-AMG GT 43 Premium RWK (Premium)+P20+DFB	Coupé	Mild-Hybrid	235	37%	1822	10.3	27.4	-	-	-	-	-	-	-
(C192) Mercedes-AMG GT 43 Premium RWK (Premium)+P71+DFB	Coupé	Mild-Hybrid	235	37%	1832	10.3	27.4	-	-	-	-	-	-	-
(C192) Mercedes-AMG GT 43 Premium RWK (Premium)+P20+P71+DFB	Coupé	Mild-Hybrid	235	37%	1834	10.3	27.4	-	-	-	-	-	-	-
(C192) Mercedes-AMG GT 43 Premium RWD (Premium)+DFB	Coupé	Mild-Hybrid	235	37%	1823	10.3	27.4	-	-	-	-	-	-	-
(C192) Mercedes-AMG GT 43 Premium RWD (Premium)+P20+DFB	Coupé	Mild-Hybrid	235	37%	1824	10.3	27.4	-	-	-	-	-	-	-
(C192) Mercedes-AMG GT 43 Premium RWD (Premium)+P71+DFB	Coupé	Mild-Hybrid	235	37%	1835	10.3	27.4	-	-	-	-	-	-	-
(C192) Mercedes-AMG GT 43 Premium RWD (Premium)+P20+P71+DFB	Coupé	Mild-Hybrid	235	37%	1837	10.3	27.4	-	-	-	-	-	-	-
(C192) Mercedes-AMG GT 43 Premium RWE (Premium)+DFB	Coupé	Mild-Hybrid	235	37%	1823	10.3	27.4	-	-	-	-	-	-	-
(C192) Mercedes-AMG GT 43 Premium RWE (Premium)+P20+DFB	Coupé	Mild-Hybrid	235	37%	1824	10.3	27.4	-	-	-	-	-	-	-
(C192) Mercedes-AMG GT 43 Premium RWE (Premium)+P71+DFB	Coupé	Mild-Hybrid	235	37%	1835	10.3	27.4	-	-	-	-	-	-	-
(C192) Mercedes-AMG GT 43 Premium RWE (Premium)+P20+P71+DFB	Coupé	Mild-Hybrid	235	37%	1837	10.3	27.4	-	-	-	-	-	-	-
(C192) Mercedes-AMG GT 43 Premium Plus	Coupé	Mild-Hybrid	235	37%	1829	10.3	27.4							
(C192) Mercedes-AMG GT 43 Premium Plus P20	Coupé	Mild-Hybrid	235	37%	1831	10.3	27.4	-	-	-	-	-	-	-
(C192) Mercedes-AMG GT 43 Premium Plus P71	Coupé	Mild-Hybrid	235	37%	1842	10.3	27.4	-	-	-	-	-	-	-
(C192) Mercedes-AMG GT 43 Premium Plus P20+P71	Coupé	Mild-Hybrid	235	37%	1844	10.3	27.4	-	-	-	-	-	-	-
(C192) Mercedes-AMG GT 43 Premium Plus RWI	Coupé	Mild-Hybrid	235	37%	1829	10.3	27.4	-	-	-	-	-	-	-

Figures shown are for comparability purposes; only compare with other vehicles tested to the same technical procedures. Figures may not reflect real-life driving results, which depend on factory-fitted options, accessories fitted after registration, weather, driving style and vehicle load. Further information about the test used to establish fuel consumption and CO_2 figures can be found at https://www.mercedes-benz.co.uk/WLTP

Figures shown are for comparability purposes; only compare with other vehicles tested to the same technical procedures. Fuel consumption, CO_2, energy consumption and electric range figures are determined in accordance with WLTP. Actual results, including electric range, may vary depending on factors including battery charge, factory-fitted options, accessories fitted after registration, weather, driving style and vehicle load. Further information can be found at https://www.mercedes-benz.co.uk/WLTP

Technical Data

AMG GT Coupé														
Model Variant	**Bodyshell**	**Fuel**	**WLTP CO2 Combined (g/km)**	**BIK Tax Rate**	**Kerb Weight (KG)**	**Combined (l/100km)**	**Combined (MPG)**	**W.Combined (l/100)**	**W.Combined (MPG)**	**Energy Consumption Combined (Wh/km)**	**EAER Electric Range KM**	**EAER Electric Range MILES**	**EAER City Range Combined KM**	**EAER City Range Combined MILES**
AMG GT 43														
(C192) Mercedes-AMG GT 43 Premium Plus RWI+P20	Coupé	Mild-Hybrid	235	37%	1831	10.3	27.4	-	-	-	-	-	-	-
(C192) Mercedes-AMG GT 43 Premium Plus RWI+P71	Coupé	Mild-Hybrid	235	37%	1842	10.3	27.4	-	-	-	-	-	-	-
(C192) Mercedes-AMG GT 43 Premium Plus RWI+P20+P71	Coupé	Mild-Hybrid	235	37%	1844	10.3	27.4	-	-	-	-	-	-	-
(C192) Mercedes-AMG GT 43 Premium Plus RWD (Premium Plus)	Coupé	Mild-Hybrid	235	37%	1832	10.3	27.4	-	-	-	-	-	-	-
(C192) Mercedes-AMG GT 43 Premium Plus RWD (Premium Plus)+P20	Coupé	Mild-Hybrid	235	37%	1834	10.3	27.4	-	-	-	-	-	-	-
(C192) Mercedes-AMG GT 43 Premium Plus RWD (Premium Plus)+P71	Coupé	Mild-Hybrid	235	37%	1845	10.3	27.4	-	-	-	-	-	-	-
(C192) Mercedes-AMG GT 43 Premium Plus RWD (Premium Plus)+P20+P71	Coupé	Mild-Hybrid	235	37%	1847	10.3	27.4	-	-	-	-	-	-	-
(C192) Mercedes-AMG GT 43 Premium Plus RWE (Premium Plus)	Coupé	Mild-Hybrid	235	37%	1832	10.3	27.4	-	-	-	-	-	-	-
(C192) Mercedes-AMG GT 43 Premium Plus RWE (Premium Plus)+P20	Coupé	Mild-Hybrid	235	37%	1834	10.3	27.4	-	-	-	-	-	-	-
(C192) Mercedes-AMG GT 43 Premium Plus RWE (Premium Plus)+P71	Coupé	Mild-Hybrid	235	37%	1845	10.3	27.4	-	-	-	-	-	-	-
(C192) Mercedes-AMG GT 43 Premium Plus RWE (Premium Plus)+P20+P71	Coupé	Mild-Hybrid	235	37%	1847	10.3	27.4	-	-	-	-	-	-	-
(C192) Mercedes-AMG GT 43 Premium Plus DFB	Coupé	Mild-Hybrid	235	37%	1823	10.3	27.4	-	-	-	-	-	-	-
(C192) Mercedes-AMG GT 43 Premium Plus P20+DFB	Coupé	Mild-Hybrid	235	37%	1825	10.3	27.4	-	-	-	-	-	-	-
(C192) Mercedes-AMG GT 43 Premium Plus P71+DFB	Coupé	Mild-Hybrid	235	37%	1836	10.3	27.4	-	-	-	-	-	-	-
(C192) Mercedes-AMG GT 43 Premium Plus P20+P71+DFB	Coupé	Mild-Hybrid	235	37%	1838	10.3	27.4	-	-	-	-	-	-	-
(C192) Mercedes-AMG GT 43 Premium Plus RWI+DFB	Coupé	Mild-Hybrid	235	37%	1823	10.3	27.4	-	-	-	-	-	-	-
(C192) Mercedes-AMG GT 43 Premium Plus RWI+P20+DFB	Coupé	Mild-Hybrid	235	37%	1825	10.3	27.4	-	-	-	-	-	-	-
(C192) Mercedes-AMG GT 43 Premium Plus RWI+P71+DFB	Coupé	Mild-Hybrid	235	37%	1836	10.3	27.4	-	-	-	-	-	-	-
(C192) Mercedes-AMG GT 43 Premium Plus RWI+P20+P71+DFB	Coupé	Mild-Hybrid	235	37%	1838	10.3	27.4	-	-	-	-	-	-	-
(C192) Mercedes-AMG GT 43 Premium Plus RWD (Premium Plus)+DFB	Coupé	Mild-Hybrid	235	37%	1826	10.3	27.4	-	-	-	-	-	-	-
(C192) Mercedes-AMG GT 43 Premium Plus RWD (Premium Plus)+P20+DFB	Coupé	Mild-Hybrid	235	37%	1828	10.3	27.4	-	-	-	-	-	-	-
(C192) Mercedes-AMG GT 43 Premium Plus RWD (Premium Plus)+P71+DFB	Coupé	Mild-Hybrid	235	37%	1839	10.3	27.4	-	-	-	-	-	-	-
(C192) Mercedes-AMG GT 43 Premium Plus RWD (Premium Plus)+P20+P71+DFB	Coupé	Mild-Hybrid	235	37%	1841	10.3	27.4	-	-	-	-	-	-	-
(C192) Mercedes-AMG GT 43 Premium Plus RWE (Premium Plus)+DFB	Coupé	Mild-Hybrid	235	37%	1826	10.3	27.4	-	-	-	-	-	-	-
(C192) Mercedes-AMG GT 43 Premium Plus RWE (Premium Plus)+P20+DFB	Coupé	Mild-Hybrid	235	37%	1828	10.3	27.4	-	-	-	-	-	-	-
(C192) Mercedes-AMG GT 43 Premium Plus RWE (Premium Plus)+P71+DFB	Coupé	Mild-Hybrid	235	37%	1839	10.3	27.4	-	-	-	-	-	-	-
(C192) Mercedes-AMG GT 43 Premium Plus RWE (Premium Plus)+P20+P71+DFB	Coupé	Mild-Hybrid	235	37%	1841	10.3	27.4	-	-	-	-	-	-	-
AMG GT 55 4MATIC+														
(C192) Mercedes-AMG GT 55 4MATIC+ Premium Coupé	Coupé	Petrol	319	37%	1980	14	20.2	-	-	-	-	-	-	-
(C192) Mercedes-AMG GT 55 4MATIC+ Premium Coupé RWD	Coupé	Petrol	319	37%	1983	14	20.2	-	-	-	-	-	-	-
(C192) Mercedes-AMG GT 55 4MATIC+ Premium Coupé RWE	Coupé	Petrol	319	37%	1983	14	20.2	-	-	-	-	-	-	-
(C192) Mercedes-AMG GT 55 4MATIC+ Premium Coupé RWK	Coupé	Petrol	319	37%	1980	14	20.2	-	-	-	-	-	-	-
(C192) Mercedes-AMG GT 55 4MATIC+ Premium Coupé RWL	Coupé	Petrol	319	37%	1972	14	20.2	-	-	-	-	-	-	-
(C192) Mercedes-AMG GT 55 4MATIC+ Premium Coupé RWM	Coupé	Petrol	319	37%	1972	14	20.2	-	-	-	-	-	-	-
(C192) Mercedes-AMG GT 55 4MATIC+ Premium Coupé P20	Coupé	Petrol	319	37%	1981	14	20.2	-	-	-	-	-	-	-
(C192) Mercedes-AMG GT 55 4MATIC+ Premium Coupé RWD+P20	Coupé	Petrol	319	37%	1984	14	20.2	-	-	-	-	-	-	-
(C192) Mercedes-AMG GT 55 4MATIC+ Premium Coupé RWE+P20	Coupé	Petrol	319	37%	1984	14	20.2	-	-	-	-	-	-	-

Figures shown are for comparability purposes; only compare with other vehicles tested to the same technical procedures. Figures may not reflect real-life driving results, which depend on factory-fitted options, accessories fitted after registration, weather, driving style and vehicle load. Further information about the test used to establish fuel consumption and CO_2 figures can be found at https://www.mercedes-benz.co.uk/WLTP

Figures shown are for comparability purposes; only compare with other vehicles tested to the same technical procedures. Fuel consumption, CO_2, energy consumption and electric range figures are determined in accordance with WLTP. Actual results, including electric range, may vary depending on factors including battery charge, factory-fitted options, accessories fitted after registration, weather, driving style and vehicle load. Further information can be found at https://www.mercedes-benz.co.uk/WLTP

Technical Data

AMG GT Coupé														
Model Variant	**Bodyshell**	**Fuel**	**WLTP CO2 Combined (g/km)**	**BIK Tax Rate**	**Kerb Weight (KG)**	**Combined (l/100km)**	**Combined (MPG)**	**W.Combined (l/100)**	**W.Combined (MPG)**	**Energy Consumption Combined (Wh/km)**	**EAER Electric Range KM**	**EAER Electric Range MILES**	**EAER City Range Combined KM**	**EAER City Range Combined MILES**
AMG GT 55 4MATIC+														
(C192) Mercedes-AMG GT 55 4MATIC+ Premium Coupé RWK+P20	Coupé	Petrol	319	37%	1981	14	20.2	-	-	-	-	-	-	-
(C192) Mercedes-AMG GT 55 4MATIC+ Premium Coupé RWL+P20	Coupé	Petrol	319	37%	1974	14	20.2	-	-	-	-	-	-	-
(C192) Mercedes-AMG GT 55 4MATIC+ Premium Coupé RWM+P20	Coupé	Petrol	319	37%	1974	14	20.2	-	-	-	-	-	-	-
(C192) Mercedes-AMG GT 55 4MATIC+ Premium Coupé DPU	Coupé	Petrol	319	37%	1961	14	20.2	-	-	-	-	-	-	-
(C192) Mercedes-AMG GT 55 4MATIC+ Premium Coupé RWD+DPU	Coupé	Petrol	319	37%	1964	14	20.2	-	-	-	-	-	-	-
(C192) Mercedes-AMG GT 55 4MATIC+ Premium Coupé RWE+DPU	Coupé	Petrol	319	37%	1964	14	20.2	-	-	-	-	-	-	-
(C192) Mercedes-AMG GT 55 4MATIC+ Premium Coupé RWK+DPU	Coupé	Petrol	319	37%	1961	14	20.2	-	-	-	-	-	-	-
(C192) Mercedes-AMG GT 55 4MATIC+ Premium Coupé RWL+DPU	Coupé	Petrol	319	37%	1954	14	20.2	-	-	-	-	-	-	-
(C192) Mercedes-AMG GT 55 4MATIC+ Premium Coupé RWM+DPU	Coupé	Petrol	319	37%	1954	14	20.2	-	-	-	-	-	-	-
(C192) Mercedes-AMG GT 55 4MATIC+ Premium Coupé RWD+DPU+P20	Coupé	Petrol	319	37%	1966	14	20.2	-	-	-	-	-	-	-
(C192) Mercedes-AMG GT 55 4MATIC+ Premium Coupé RWE+DPU+P20	Coupé	Petrol	319	37%	1966	14	20.2	-	-	-	-	-	-	-
(C192) Mercedes-AMG GT 55 4MATIC+ Premium Coupé RWK+DPU+P20	Coupé	Petrol	319	37%	1963	14	20.2	-	-	-	-	-	-	-
(C192) Mercedes-AMG GT 55 4MATIC+ Premium Coupé RWL+DPU+P20	Coupé	Petrol	319	37%	1955	14	20.2	-	-	-	-	-	-	-
(C192) Mercedes-AMG GT 55 4MATIC+ Premium Coupé RWM+DPU+P20	Coupé	Petrol	319	37%	1955	14	20.2	-	-	-	-	-	-	-
(C192) Mercedes-AMG GT 55 4MATIC+ Premium Coupé DFB	Coupé	Petrol	319	37%	1973	14	20.2	-	-	-	-	-	-	-
(C192) Mercedes-AMG GT 55 4MATIC+ Premium Coupé RWD+DFB	Coupé	Petrol	319	37%	1977	14	20.2	-	-	-	-	-	-	-
(C192) Mercedes-AMG GT 55 4MATIC+ Premium Coupé RWE+DFB	Coupé	Petrol	319	37%	1977	14	20.2	-	-	-	-	-	-	-
(C192) Mercedes-AMG GT 55 4MATIC+ Premium Coupé RWK+DFB	Coupé	Petrol	319	37%	1973	14	20.2	-	-	-	-	-	-	-
(C192) Mercedes-AMG GT 55 4MATIC+ Premium Coupé RWL+DFB	Coupé	Petrol	319	37%	1966	14	20.2	-	-	-	-	-	-	-
(C192) Mercedes-AMG GT 55 4MATIC+ Premium Coupé RWM+DFB	Coupé	Petrol	319	37%	1966	14	20.2	-	-	-	-	-	-	-
(C192) Mercedes-AMG GT 55 4MATIC+ Premium Coupé P20+DFB	Coupé	Petrol	319	37%	1975	14	20.2	-	-	-	-	-	-	-
(C192) Mercedes-AMG GT 55 4MATIC+ Premium Coupé RWD+P20+DFB	Coupé	Petrol	319	37%	1978	14	20.2	-	-	-	-	-	-	-
(C192) Mercedes-AMG GT 55 4MATIC+ Premium Coupé RWE+P20+DFB	Coupé	Petrol	319	37%	1978	14	20.2	-	-	-	-	-	-	-
(C192) Mercedes-AMG GT 55 4MATIC+ Premium Coupé RWK+P20+DFB	Coupé	Petrol	319	37%	1975	14	20.2	-	-	-	-	-	-	-
(C192) Mercedes-AMG GT 55 4MATIC+ Premium Coupé RWL+P20+DFB	Coupé	Petrol	319	37%	1967	14	20.2	-	-	-	-	-	-	-
(C192) Mercedes-AMG GT 55 4MATIC+ Premium Coupé RWM+P20+DFB	Coupé	Petrol	319	37%	1967	14	20.2	-	-	-	-	-	-	-
(C192) Mercedes-AMG GT 55 4MATIC+ Premium Coupé DPU+DFB	Coupé	Petrol	319	37%	1955	14	20.2	-	-	-	-	-	-	-
(C192) Mercedes-AMG GT 55 4MATIC+ Premium Coupé RWD+DPU+DFB	Coupé	Petrol	319	37%	1958	14	20.2	-	-	-	-	-	-	-
(C192) Mercedes-AMG GT 55 4MATIC+ Premium Coupé RWE+DPU+DFB	Coupé	Petrol	319	37%	1958	14	20.2	-	-	-	-	-	-	-
(C192) Mercedes-AMG GT 55 4MATIC+ Premium Coupé RWK+DPU+DFB	Coupé	Petrol	319	37%	1955	14	20.2	-	-	-	-	-	-	-
(C192) Mercedes-AMG GT 55 4MATIC+ Premium Coupé RWL+DPU+DFB	Coupé	Petrol	319	37%	1947	14	20.2	-	-	-	-	-	-	-
(C192) Mercedes-AMG GT 55 4MATIC+ Premium Coupé RWM+DPU+DFB	Coupé	Petrol	319	37%	1947	14	20.2	-	-	-	-	-	-	-
(C192) Mercedes-AMG GT 55 4MATIC+ Premium Coupé RWD+DPU+P20+DFB	Coupé	Petrol	319	37%	1960	14	20.2	-	-	-	-	-	-	-
(C192) Mercedes-AMG GT 55 4MATIC+ Premium Coupé RWE+DPU+P20+DFB	Coupé	Petrol	319	37%	1960	14	20.2	-	-	-	-	-	-	-
(C192) Mercedes-AMG GT 55 4MATIC+ Premium Coupé RWK+DPU+P20+DFB	Coupé	Petrol	319	37%	1957	14	20.2	-	-	-	-	-	-	-
(C192) Mercedes-AMG GT 55 4MATIC+ Premium Coupé RWL+DPU+P20+DFB	Coupé	Petrol	319	37%	1949	14	20.2	-	-	-	-	-	-	-
(C192) Mercedes-AMG GT 55 4MATIC+ Premium Coupé RWM+DPU+P20+DFB	Coupé	Petrol	319	37%	1949	14	20.2	-	-	-	-	-	-	-

Figures shown are for comparability purposes; only compare with other vehicles tested to the same technical procedures. Figures may not reflect real-life driving results, which depend on factory-fitted options, accessories fitted after registration, weather, driving style and vehicle load. Further information about the test used to establish fuel consumption and CO_2 figures can be found at https://www.mercedes-benz.co.uk/WLTP

Figures shown are for comparability purposes; only compare with other vehicles tested to the same technical procedures. Fuel consumption, CO_2, energy consumption and electric range figures are determined in accordance with WLTP. Actual results, including electric range, may vary depending on factors including battery charge, factory-fitted options, accessories fitted after registration, weather, driving style and vehicle load. Further information can be found at https://www.mercedes-benz.co.uk/WLTP

Technical Data

AMG GT Coupé															
Model Variant	**Bodyshell**	**Fuel**	**WLTP CO2 Combined (g/km)**	**BIK Tax Rate**	**Kerb Weight (KG)**	**Combined (l/100km)**	**Combined (MPG)**	**W.Combined (l/100)**	**W.Combined (MPG)**	**Energy Consumption Combined (Wh/km)**	**EAER Electric Range KM**	**EAER Electric Range MILES**	**EAER City Range Combined KM**	**EAER City Range Combined MILES**
AMG GT 55 4MATIC+														
(C192) Mercedes-AMG GT 55 4MATIC+ Premium Plus	Coupé	Petrol	319	37%	1983	14	20.2	-	-	-	-	-	-	-
(C192) Mercedes-AMG GT 55 4MATIC+ Premium Plus P20	Coupé	Petrol	319	37%	1985	14	20.2	-	-	-	-	-	-	-
(C192) Mercedes-AMG GT 55 4MATIC+ Premium Plus DPU (55/63)	Coupé	Petrol	319	37%	1963	14	20.2	-	-	-	-	-	-	-
(C192) Mercedes-AMG GT 55 4MATIC+ Premium Plus P20+DPU (55/63)	Coupé	Petrol	319	37%	1964	14	20.2	-	-	-	-	-	-	-
(C192) Mercedes-AMG GT 55 4MATIC+ Premium Plus RWI	Coupé	Petrol	319	37%	1983	14	20.2	-	-	-	-	-	-	-
(C192) Mercedes-AMG GT 55 4MATIC+ Premium Plus RWI+P20	Coupé	Petrol	319	37%	1985	14	20.2	-	-	-	-	-	-	-
(C192) Mercedes-AMG GT 55 4MATIC+ Premium Plus RWI+DPU (55/63)	Coupé	Petrol	319	37%	1963	14	20.2	-	-	-	-	-	-	-
(C192) Mercedes-AMG GT 55 4MATIC+ Premium Plus RWI+P20+DPU (55/63)	Coupé	Petrol	319	37%	1964	14	20.2	-	-	-	-	-	-	-
(C192) Mercedes-AMG GT 55 4MATIC+ Premium Plus RWL (Premium Plus)	Coupé	Petrol	319	37%	1975	14	20.2	-	-	-	-	-	-	-
(C192) Mercedes-AMG GT 55 4MATIC+ Premium Plus RWL (Premium Plus)+P20	Coupé	Petrol	319	37%	1977	14	20.2	-	-	-	-	-	-	-
(C192) Mercedes-AMG GT 55 4MATIC+ Premium Plus RWL (Premium Plus)+DPU (55/63)	Coupé	Petrol	319	37%	1955	14	20.2	-	-	-	-	-	-	-
(C192) Mercedes-AMG GT 55 4MATIC+ Premium Plus RWL (Premium Plus)+P20+DPU (55/63)	Coupé	Petrol	319	37%	1957	14	20.2	-	-	-	-	-	-	-
(C192) Mercedes-AMG GT 55 4MATIC+ Premium Plus RWD (Premium Plus)	Coupé	Petrol	319	37%	1986	14	20.2	-	-	-	-	-	-	-
(C192) Mercedes-AMG GT 55 4MATIC+ Premium Plus RWD (Premium Plus)+P20	Coupé	Petrol	319	37%	1988	14	20.2	-	-	-	-	-	-	-
(C192) Mercedes-AMG GT 55 4MATIC+ Premium Plus RWD (Premium Plus)+DPU (55/63)	Coupé	Petrol	319	37%	1966	14	20.2	-	-	-	-	-	-	-
(C192) Mercedes-AMG GT 55 4MATIC+ Premium Plus RWD (Premium Plus)+P20+DPU (55/63)	Coupé	Petrol	319	37%	1968	14	20.2	-	-	-	-	-	-	-
(C192) Mercedes-AMG GT 55 4MATIC+ Premium Plus RWE (Premium Plus)	Coupé	Petrol	319	37%	1986	14	20.2	-	-	-	-	-	-	-
(C192) Mercedes-AMG GT 55 4MATIC+ Premium Plus RWE (Premium Plus)+P20	Coupé	Petrol	319	37%	1988	14	20.2	-	-	-	-	-	-	-
(C192) Mercedes-AMG GT 55 4MATIC+ Premium Plus RWE (Premium Plus)+DPU (55/63)	Coupé	Petrol	319	37%	1966	14	20.2	-	-	-	-	-	-	-
(C192) Mercedes-AMG GT 55 4MATIC+ Premium Plus RWE (Premium Plus)+P20+DPU (55/63)	Coupé	Petrol	319	37%	1968	14	20.2	-	-	-	-	-	-	-
(C192) Mercedes-AMG GT 55 4MATIC+ Premium Plus RWM	Coupé	Petrol	319	37%	1975	14	20.2	-	-	-	-	-	-	-
(C192) Mercedes-AMG GT 55 4MATIC+ Premium Plus RWM+P20	Coupé	Petrol	319	37%	1977	14	20.2	-	-	-	-	-	-	-
(C192) Mercedes-AMG GT 55 4MATIC+ Premium Plus RWM+DPU (55/63)	Coupé	Petrol	319	37%	1955	14	20.2	-	-	-	-	-	-	-
(C192) Mercedes-AMG GT 55 4MATIC+ Premium Plus RWM+P20+DPU (55/63)	Coupé	Petrol	319	37%	1957	14	20.2	-	-	-	-	-	-	-
(C192) Mercedes-AMG GT 55 4MATIC+ Premium Plus DFB	Coupé	Petrol	319	37%	1977	14	20.2	-	-	-	-	-	-	-
(C192) Mercedes-AMG GT 55 4MATIC+ Premium Plus P20+DFB	Coupé	Petrol	319	37%	1979	14	20.2	-	-	-	-	-	-	-
(C192) Mercedes-AMG GT 55 4MATIC+ Premium Plus DPU (55/63)+DFB	Coupé	Petrol	319	37%	1957	14	20.2	-	-	-	-	-	-	-
(C192) Mercedes-AMG GT 55 4MATIC+ Premium Plus P20+DPU (55/63)+DFB	Coupé	Petrol	319	37%	1958	14	20.2	-	-	-	-	-	-	-
(C192) Mercedes-AMG GT 55 4MATIC+ Premium Plus RWI+DFB	Coupé	Petrol	319	37%	1977	14	20.2	-	-	-	-	-	-	-
(C192) Mercedes-AMG GT 55 4MATIC+ Premium Plus RWI+P20+DFB	Coupé	Petrol	319	37%	1979	14	20.2	-	-	-	-	-	-	-
(C192) Mercedes-AMG GT 55 4MATIC+ Premium Plus RWI+DPU (55/63)+DFB	Coupé	Petrol	319	37%	1957	14	20.2	-	-	-	-	-	-	-
(C192) Mercedes-AMG GT 55 4MATIC+ Premium Plus RWI+P20+DPU (55/63)+DFB	Coupé	Petrol	319	37%	1958	14	20.2	-	-	-	-	-	-	-
(C192) Mercedes-AMG GT 55 4MATIC+ Premium Plus RWL (Premium Plus)+DFB	Coupé	Petrol	319	37%	1969	14	20.2	-	-	-	-	-	-	-
(C192) Mercedes-AMG GT 55 4MATIC+ Premium Plus RWL (Premium Plus)+P20+DFB	Coupé	Petrol	319	37%	1971	14	20.2	-	-	-	-	-	-	-
(C192) Mercedes-AMG GT 55 4MATIC+ Premium Plus RWL (Premium Plus)+DPU (55/63)+DFB	Coupé	Petrol	319	37%	1949	14	20.2	-	-	-	-	-	-	-
(C192) Mercedes-AMG GT 55 4MATIC+ Premium Plus RWL (Premium Plus)+P20+DPU (55/63)+DFB	Coupé	Petrol	319	37%	1951	14	20.2	-	-	-	-	-	-	-
(C192) Mercedes-AMG GT 55 4MATIC+ Premium Plus RWD (Premium Plus)+DFB	Coupé	Petrol	319	37%	1980	14	20.2	-	-	-	-	-	-	-

Figures shown are for comparability purposes; only compare with other vehicles tested to the same technical procedures. Figures may not reflect real-life driving results, which depend on factory-fitted options, accessories fitted after registration, weather, driving style and vehicle load. Further information about the test used to establish fuel consumption and CO_2 figures can be found at https://www.mercedes-benz.co.uk/WLTP

Figures shown are for comparability purposes; only compare with other vehicles tested to the same technical procedures. Fuel consumption, CO_2, energy consumption and electric range figures are determined in accordance with WLTP. Actual results, including electric range, may vary depending on factors including battery charge, factory-fitted options, accessories fitted after registration, weather, driving style and vehicle load. Further information can be found at https://www.mercedes-benz.co.uk/WLTP

Technical Data

AMG GT Coupé															
Model Variant	**Bodyshell**	**Fuel**	**WLTP CO2 Combined (g/km)**	**BIK Tax Rate**	**Kerb Weight (KG)**	**Combined (l/100km)**	**Combined (MPG)**	**W.Combined (l/100)**	**W.Combined (MPG)**	**Energy Consumption Combined (Wh/km)**	**EAER Electric Range KM**	**EAER Electric Range MILES**	**EAER City Range Combined KM**	**EAER City Range Combined MILES**
AMG GT 55 4MATIC+														
(C192) Mercedes-AMG GT 55 4MATIC+ Premium Plus RWD (Premium Plus)+P20+DFB	Coupé	Petrol	319	37%	1982	14	20.2	-	-	-	-	-	-	-
(C192) Mercedes-AMG GT 55 4MATIC+ Premium Plus RWD (Premium Plus)+DPU (55/63)+DFB	Coupé	Petrol	319	37%	1960	14	20.2	-	-	-	-	-	-	-
(C192) Mercedes-AMG GT 55 4MATIC+ Premium Plus RWD (Premium Plus)+P20+DPU (55/63)+DFB	Coupé	Petrol	319	37%	1961	14	20.2	-	-	-	-	-	-	-
(C192) Mercedes-AMG GT 55 4MATIC+ Premium Plus RWE (Premium Plus)+DFB	Coupé	Petrol	319	37%	1980	14	20.2	-	-	-	-	-	-	-
(C192) Mercedes-AMG GT 55 4MATIC+ Premium Plus RWE (Premium Plus)+P20+DFB	Coupé	Petrol	319	37%	1982	14	20.2	-	-	-	-	-	-	-
(C192) Mercedes-AMG GT 55 4MATIC+ Premium Plus RWE (Premium Plus)+DPU (55/63)+DFB	Coupé	Petrol	319	37%	1960	14	20.2	-	-	-	-	-	-	-
(C192) Mercedes-AMG GT 55 4MATIC+ Premium Plus RWE (Premium Plus)+P20+DPU (55/63)+DFB	Coupé	Petrol	319	37%	1961	14	20.2	-	-	-	-	-	-	-
(C192) Mercedes-AMG GT 55 4MATIC+ Premium Plus RWM+DFB	Coupé	Petrol	319	37%	1969	14	20.2	-	-	-	-	-	-	-
(C192) Mercedes-AMG GT 55 4MATIC+ Premium Plus RWM+P20+DFB	Coupé	Petrol	319	37%	1971	14	20.2	-	-	-	-	-	-	-
(C192) Mercedes-AMG GT 55 4MATIC+ Premium Plus RWM+DPU (55/63)+DFB	Coupé	Petrol	319	37%	1949	14	20.2	-	-	-	-	-	-	-
(C192) Mercedes-AMG GT 55 4MATIC+ Premium Plus RWM+P20+DPU (55/63)+DFB	Coupé	Petrol	319	37%	1951	14	20.2	-	-	-	-	-	-	-
AMG GT 63 4MATIC+														
(C192) Mercedes-AMG GT 63 4MATIC+ Premium Coupé	Coupé	Petrol	319	37%	1982	14	20.2	-	-	-	-	-	-	-
(C192) Mercedes-AMG GT 63 4MATIC+ Premium Coupé RWD	Coupé	Petrol	319	37%	1985	14	20.2	-	-	-	-	-	-	-
(C192) Mercedes-AMG GT 63 4MATIC+ Premium Coupé RWE	Coupé	Petrol	319	37%	1985	14	20.2	-	-	-	-	-	-	-
(C192) Mercedes-AMG GT 63 4MATIC+ Premium Coupé RWK	Coupé	Petrol	319	37%	1982	14	20.2	-	-	-	-	-	-	-
(C192) Mercedes-AMG GT 63 4MATIC+ Premium Coupé RWL	Coupé	Petrol	319	37%	1975	14	20.2	-	-	-	-	-	-	-
(C192) Mercedes-AMG GT 63 4MATIC+ Premium Coupé RWM	Coupé	Petrol	319	37%	1975	14	20.2	-	-	-	-	-	-	-
(C192) Mercedes-AMG GT 63 4MATIC+ Premium Coupé P20	Coupé	Petrol	319	37%	1984	14	20.2	-	-	-	-	-	-	-
(C192) Mercedes-AMG GT 63 4MATIC+ Premium Coupé RWD+P20	Coupé	Petrol	319	37%	1987	14	20.2	-	-	-	-	-	-	-
(C192) Mercedes-AMG GT 63 4MATIC+ Premium Coupé RWE+P20	Coupé	Petrol	319	37%	1987	14	20.2	-	-	-	-	-	-	-
(C192) Mercedes-AMG GT 63 4MATIC+ Premium Coupé RWK+P20	Coupé	Petrol	319	37%	1984	14	20.2	-	-	-	-	-	-	-
(C192) Mercedes-AMG GT 63 4MATIC+ Premium Coupé RWL+P20	Coupé	Petrol	319	37%	1976	14	20.2	-	-	-	-	-	-	-
(C192) Mercedes-AMG GT 63 4MATIC+ Premium Coupé RWM+P20	Coupé	Petrol	319	37%	1976	14	20.2	-	-	-	-	-	-	-
(C192) Mercedes-AMG GT 63 4MATIC+ Premium Coupé DPU	Coupé	Petrol	319	37%	1964	14	20.2	-	-	-	-	-	-	-
(C192) Mercedes-AMG GT 63 4MATIC+ Premium Coupé RWD+DPU	Coupé	Petrol	319	37%	1967	14	20.2	-	-	-	-	-	-	-
(C192) Mercedes-AMG GT 63 4MATIC+ Premium Coupé RWE+DPU	Coupé	Petrol	319	37%	1967	14	20.2	-	-	-	-	-	-	-
(C192) Mercedes-AMG GT 63 4MATIC+ Premium Coupé RWK+DPU	Coupé	Petrol	319	37%	1964	14	20.2	-	-	-	-	-	-	-
(C192) Mercedes-AMG GT 63 4MATIC+ Premium Coupé RWL+DPU	Coupé	Petrol	319	37%	1956	14	20.2	-	-	-	-	-	-	-
(C192) Mercedes-AMG GT 63 4MATIC+ Premium Coupé RWM+DPU	Coupé	Petrol	319	37%	1956	14	20.2	-	-	-	-	-	-	-
(C192) Mercedes-AMG GT 63 4MATIC+ Premium Coupé RWD+DPU+P20	Coupé	Petrol	319	37%	1969	14	20.2	-	-	-	-	-	-	-
(C192) Mercedes-AMG GT 63 4MATIC+ Premium Coupé RWE+DPU+P20	Coupé	Petrol	319	37%	1969	14	20.2	-	-	-	-	-	-	-
(C192) Mercedes-AMG GT 63 4MATIC+ Premium Coupé RWK+DPU+P20	Coupé	Petrol	319	37%	1966	14	20.2	-	-	-	-	-	-	-
(C192) Mercedes-AMG GT 63 4MATIC+ Premium Coupé RWL+DPU+P20	Coupé	Petrol	319	37%	1958	14	20.2	-	-	-	-	-	-	-
(C192) Mercedes-AMG GT 63 4MATIC+ Premium Coupé RWM+DPU+P20	Coupé	Petrol	319	37%	1958	14	20.2	-	-	-	-	-	-	-
(C192) Mercedes-AMG GT 63 4MATIC+ Premium Coupé DFB	Coupé	Petrol	319	37%	1976	14	20.2	-	-	-	-	-	-	-
(C192) Mercedes-AMG GT 63 4MATIC+ Premium Coupé RWD+DFB	Coupé	Petrol	319	37%	1979	14	20.2	-	-	-	-	-	-	-

Figures shown are for comparability purposes; only compare with other vehicles tested to the same technical procedures. Figures may not reflect real-life driving results, which depend on factory-fitted options, accessories fitted after registration, weather, driving style and vehicle load. Further information about the test used to establish fuel consumption and CO_2 figures can be found at https://www.mercedes-benz.co.uk/WLTP

Figures shown are for comparability purposes; only compare with other vehicles tested to the same technical procedures. Fuel consumption, CO_2, energy consumption and electric range figures are determined in accordance with WLTP. Actual results, including electric range, may vary depending on factors including battery charge, factory-fitted options, accessories fitted after registration, weather, driving style and vehicle load. Further information can be found at https://www.mercedes-benz.co.uk/WLTP

Technical Data

AMG GT Coupé															
Model Variant	Bodyshell	Fuel	WLTP CO2 Combined (g/km)	BIK Tax Rate	Kerb Weight (KG)	Combined (l/100km)	Combined (MPG)	W.Combined (l/100)	W.Combined (MPG)	Energy Consumption Combined (Wh/km)	EAER Electric Range KM	EAER Electric Range MILES	EAER City Range Combined KM	EAER City Range Combined MILES
AMG GT 63 4MATIC+														
(C192) Mercedes-AMG GT 63 4MATIC+ Premium Coupé RWE+DFB	Coupé	Petrol	319	37%	1979	14	20.2	-	-	-	-	-	-	-
(C192) Mercedes-AMG GT 63 4MATIC+ Premium Coupé RWK+DFB	Coupé	Petrol	319	37%	1976	14	20.2	-	-	-	-	-	-	-
(C192) Mercedes-AMG GT 63 4MATIC+ Premium Coupé RWL+DFB	Coupé	Petrol	319	37%	1968	14	20.2	-	-	-	-	-	-	-
(C192) Mercedes-AMG GT 63 4MATIC+ Premium Coupé RWM+DFB	Coupé	Petrol	319	37%	1968	14	20.2	-	-	-	-	-	-	-
(C192) Mercedes-AMG GT 63 4MATIC+ Premium Coupé P20+DFB	Coupé	Petrol	319	37%	1978	14	20.2	-	-	-	-	-	-	-
(C192) Mercedes-AMG GT 63 4MATIC+ Premium Coupé RWD+P20+DFB	Coupé	Petrol	319	37%	1981	14	20.2	-	-	-	-	-	-	-
(C192) Mercedes-AMG GT 63 4MATIC+ Premium Coupé RWE+P20+DFB	Coupé	Petrol	319	37%	1981	14	20.2	-	-	-	-	-	-	-
(C192) Mercedes-AMG GT 63 4MATIC+ Premium Coupé RWK+P20+DFB	Coupé	Petrol	319	37%	1978	14	20.2	-	-	-	-	-	-	-
(C192) Mercedes-AMG GT 63 4MATIC+ Premium Coupé RWL+P20+DFB	Coupé	Petrol	319	37%	1970	14	20.2	-	-	-	-	-	-	-
(C192) Mercedes-AMG GT 63 4MATIC+ Premium Coupé RWM+P20+DFB	Coupé	Petrol	319	37%	1970	14	20.2	-	-	-	-	-	-	-
(C192) Mercedes-AMG GT 63 4MATIC+ Premium Coupé DPU+DFB	Coupé	Petrol	319	37%	1958	14	20.2	-	-	-	-	-	-	-
(C192) Mercedes-AMG GT 63 4MATIC+ Premium Coupé RWD+DPU+DFB	Coupé	Petrol	319	37%	1961	14	20.2	-	-	-	-	-	-	-
(C192) Mercedes-AMG GT 63 4MATIC+ Premium Coupé RWE+DPU+DFB	Coupé	Petrol	319	37%	1961	14	20.2	-	-	-	-	-	-	-
(C192) Mercedes-AMG GT 63 4MATIC+ Premium Coupé RWK+DPU+DFB	Coupé	Petrol	319	37%	1958	14	20.2	-	-	-	-	-	-	-
(C192) Mercedes-AMG GT 63 4MATIC+ Premium Coupé RWL+DPU+DFB	Coupé	Petrol	319	37%	1950	14	20.2	-	-	-	-	-	-	-
(C192) Mercedes-AMG GT 63 4MATIC+ Premium Coupé RWM+DPU+DFB	Coupé	Petrol	319	37%	1950	14	20.2	-	-	-	-	-	-	-
(C192) Mercedes-AMG GT 63 4MATIC+ Premium Coupé DPU+P20+DFB	Coupé	Petrol	319	37%	1960	14	20.2	-	-	-	-	-	-	-
(C192) Mercedes-AMG GT 63 4MATIC+ Premium Coupé RWD+DPU+P20+DFB	Coupé	Petrol	319	37%	1963	14	20.2	-	-	-	-	-	-	-
(C192) Mercedes-AMG GT 63 4MATIC+ Premium Coupé RWE+DPU+P20+DFB	Coupé	Petrol	319	37%	1963	14	20.2	-	-	-	-	-	-	-
(C192) Mercedes-AMG GT 63 4MATIC+ Premium Coupé RWK+DPU+P20+DFB	Coupé	Petrol	319	37%	1960	14	20.2	-	-	-	-	-	-	-
(C192) Mercedes-AMG GT 63 4MATIC+ Premium Coupé RWL+DPU+P20+DFB	Coupé	Petrol	319	37%	1952	14	20.2	-	-	-	-	-	-	-
(C192) Mercedes-AMG GT 63 4MATIC+ Premium Coupé RWM+DPU+P20+DFB	Coupé	Petrol	319	37%	1952	14	20.2	-	-	-	-	-	-	-
(C192) Mercedes-AMG GT 63 4MATIC+ Premium Plus	Coupé	Petrol	319	37%	1986	14	20.2	-	-	-	-	-	-	-
(C192) Mercedes-AMG GT 63 4MATIC+ Premium Plus P20	Coupé	Petrol	319	37%	1988	14	20.2	-	-	-	-	-	-	-
(C192) Mercedes-AMG GT 63 4MATIC+ Premium Plus DPU (55/63)	Coupé	Petrol	319	37%	1966	14	20.2	-	-	-	-	-	-	-
(C192) Mercedes-AMG GT 63 4MATIC+ Premium Plus P20+DPU (55/63)	Coupé	Petrol	319	37%	1967	14	20.2	-	-	-	-	-	-	-
(C192) Mercedes-AMG GT 63 4MATIC+ Premium Plus RWI	Coupé	Petrol	319	37%	1986	14	20.2	-	-	-	-	-	-	-
(C192) Mercedes-AMG GT 63 4MATIC+ Premium Plus RWI+P20	Coupé	Petrol	319	37%	1988	14	20.2	-	-	-	-	-	-	-
(C192) Mercedes-AMG GT 63 4MATIC+ Premium Plus RWI+DPU (55/63)	Coupé	Petrol	319	37%	1966	14	20.2	-	-	-	-	-	-	-
(C192) Mercedes-AMG GT 63 4MATIC+ Premium Plus RWI+P20+DPU (55/63)	Coupé	Petrol	319	37%	1967	14	20.2	-	-	-	-	-	-	-
(C192) Mercedes-AMG GT 63 4MATIC+ Premium Plus RWL (Premium Plus)	Coupé	Petrol	319	37%	1978	14	20.2	-	-	-	-	-	-	-
(C192) Mercedes-AMG GT 63 4MATIC+ Premium Plus RWL (Premium Plus)+P20	Coupé	Petrol	319	37%	1980	14	20.2	-	-	-	-	-	-	-
(C192) Mercedes-AMG GT 63 4MATIC+ Premium Plus RWL (Premium Plus)+DPU (55/63)	Coupé	Petrol	319	37%	1958	14	20.2	-	-	-	-	-	-	-
(C192) Mercedes-AMG GT 63 4MATIC+ Premium Plus RWL (Premium Plus)+P20+DPU (55/63)	Coupé	Petrol	319	37%	1960	14	20.2	-	-	-	-	-	-	-
(C192) Mercedes-AMG GT 63 4MATIC+ Premium Plus RWD (Premium Plus)	Coupé	Petrol	319	37%	1989	14	20.2	-	-	-	-	-	-	-
(C192) Mercedes-AMG GT 63 4MATIC+ Premium Plus RWD (Premium Plus)+P20	Coupé	Petrol	319	37%	1991	14	20.2	-	-	-	-	-	-	-
(C192) Mercedes-AMG GT 63 4MATIC+ Premium Plus RWD (Premium Plus)+DPU (55/63)	Coupé	Petrol	319	37%	1969	14	20.2	-	-	-	-	-	-	-

Figures shown are for comparability purposes; only compare with other vehicles tested to the same technical procedures. Figures may not reflect real-life driving results, which depend on factory-fitted options, accessories fitted after registration, weather, driving style and vehicle load. Further information about the test used to establish fuel consumption and CO_2 figures can be found at https://www.mercedes-benz.co.uk/WLTP

Figures shown are for comparability purposes; only compare with other vehicles tested to the same technical procedures. Fuel consumption, CO_2, energy consumption and electric range figures are determined in accordance with WLTP. Actual results, including electric range, may vary depending on factors including battery charge, factory-fitted options, accessories fitted after registration, weather, driving style and vehicle load. Further information can be found at https://www.mercedes-benz.co.uk/WLTP

Technical Data

Model Variant	Bodyshell	Fuel	WLTP CO2 Combined (g/km)	BIK Tax Rate	Kerb Weight (KG)	Combined (l/100km)	Combined (MPG)	W.Combined (l/100)	W.Combined (MPG)	Energy Consumption Combined (Wh/km)	EAER Electric Range KM	EAER Electric Range MILES	EAER City Range Combined KM	EAER City Range Combined MILES
AMG GT Coupé														
AMG GT 63 4MATIC+														
(C192) Mercedes-AMG GT 63 4MATIC+ Premium Plus RWD (Premium Plus)+P20+DPU (55/63)	Coupé	Petrol	319	37%	1970	14	20.2	-	-	-	-	-	-	-
(C192) Mercedes-AMG GT 63 4MATIC+ Premium Plus RWE (Premium Plus)	Coupé	Petrol	319	37%	1989	14	20.2	-	-	-	-	-	-	-
(C192) Mercedes-AMG GT 63 4MATIC+ Premium Plus RWE (Premium Plus)+P20	Coupé	Petrol	319	37%	1991	14	20.2	-	-	-	-	-	-	-
(C192) Mercedes-AMG GT 63 4MATIC+ Premium Plus RWE (Premium Plus)+DPU (55/63)	Coupé	Petrol	319	37%	1969	14	20.2	-	-	-	-	-	-	-
(C192) Mercedes-AMG GT 63 4MATIC+ Premium Plus RWE (Premium Plus)+P20+DPU (55/63)	Coupé	Petrol	319	37%	1970	14	20.2	-	-	-	-	-	-	-
(C192) Mercedes-AMG GT 63 4MATIC+ Premium Plus RWM	Coupé	Petrol	319	37%	1978	14	20.2	-	-	-	-	-	-	-
(C192) Mercedes-AMG GT 63 4MATIC+ Premium Plus RWM+P20	Coupé	Petrol	319	37%	1980	14	20.2	-	-	-	-	-	-	-
(C192) Mercedes-AMG GT 63 4MATIC+ Premium Plus RWM+DPU (55/63)	Coupé	Petrol	319	37%	1958	14	20.2	-	-	-	-	-	-	-
(C192) Mercedes-AMG GT 63 4MATIC+ Premium Plus RWM+P20+DPU (55/63)	Coupé	Petrol	319	37%	1960	14	20.2	-	-	-	-	-	-	-
(C192) Mercedes-AMG GT 63 4MATIC+ Premium Plus DFB	Coupé	Petrol	319	37%	1980	14	20.2	-	-	-	-	-	-	-
(C192) Mercedes-AMG GT 63 4MATIC+ Premium Plus P20+DFB	Coupé	Petrol	319	37%	1981	14	20.2	-	-	-	-	-	-	-
(C192) Mercedes-AMG GT 63 4MATIC+ Premium Plus DPU (55/63)+DFB	Coupé	Petrol	319	37%	1959	14	20.2	-	-	-	-	-	-	-
(C192) Mercedes-AMG GT 63 4MATIC+ Premium Plus P20+DPU (55/63)+DFB	Coupé	Petrol	319	37%	1961	14	20.2	-	-	-	-	-	-	-
(C192) Mercedes-AMG GT 63 4MATIC+ Premium Plus RWI+DFB	Coupé	Petrol	319	37%	1980	14	20.2	-	-	-	-	-	-	-
(C192) Mercedes-AMG GT 63 4MATIC+ Premium Plus RWI+P20+DFB	Coupé	Petrol	319	37%	1981	14	20.2	-	-	-	-	-	-	-
(C192) Mercedes-AMG GT 63 4MATIC+ Premium Plus RWI+DPU (55/63)+DFB	Coupé	Petrol	319	37%	1959	14	20.2	-	-	-	-	-	-	-
(C192) Mercedes-AMG GT 63 4MATIC+ Premium Plus RWI+P20+DPU (55/63)+DFB	Coupé	Petrol	319	37%	1961	14	20.2	-	-	-	-	-	-	-
(C192) Mercedes-AMG GT 63 4MATIC+ Premium Plus RWL (Premium Plus)+DFB	Coupé	Petrol	319	37%	1972	14	20.2	-	-	-	-	-	-	-
(C192) Mercedes-AMG GT 63 4MATIC+ Premium Plus RWL (Premium Plus)+P20+DFB	Coupé	Petrol	319	37%	1974	14	20.2	-	-	-	-	-	-	-
(C192) Mercedes-AMG GT 63 4MATIC+ Premium Plus RWL (Premium Plus)+DPU (55/63)+DFB	Coupé	Petrol	319	37%	1952	14	20.2	-	-	-	-	-	-	-
(C192) Mercedes-AMG GT 63 4MATIC+ Premium Plus RWL (Premium Plus)+P20+DPU (55/63)+DFB	Coupé	Petrol	319	37%	1953	14	20.2	-	-	-	-	-	-	-
(C192) Mercedes-AMG GT 63 4MATIC+ Premium Plus RWD (Premium Plus)+DFB	Coupé	Petrol	319	37%	1983	14	20.2	-	-	-	-	-	-	-
(C192) Mercedes-AMG GT 63 4MATIC+ Premium Plus RWD (Premium Plus)+P20+DFB	Coupé	Petrol	319	37%	1985	14	20.2	-	-	-	-	-	-	-
(C192) Mercedes-AMG GT 63 4MATIC+ Premium Plus RWD (Premium Plus)+DPU (55/63)+DFB	Coupé	Petrol	319	37%	1963	14	20.2	-	-	-	-	-	-	-
(C192) Mercedes-AMG GT 63 4MATIC+ Premium Plus RWD (Premium Plus)+P20+DPU (55/63)+DFB	Coupé	Petrol	319	37%	1964	14	20.2	-	-	-	-	-	-	-
(C192) Mercedes-AMG GT 63 4MATIC+ Premium Plus RWE (Premium Plus)+DFB	Coupé	Petrol	319	37%	1983	14	20.2	-	-	-	-	-	-	-
(C192) Mercedes-AMG GT 63 4MATIC+ Premium Plus RWE (Premium Plus)+P20+DFB	Coupé	Petrol	319	37%	1985	14	20.2	-	-	-	-	-	-	-
(C192) Mercedes-AMG GT 63 4MATIC+ Premium Plus RWE (Premium Plus)+DPU (55/63)+DFB	Coupé	Petrol	319	37%	1963	14	20.2	-	-	-	-	-	-	-
(C192) Mercedes-AMG GT 63 4MATIC+ Premium Plus RWE (Premium Plus)+P20+DPU (55/63)+DFB	Coupé	Petrol	319	37%	1964	14	20.2	-	-	-	-	-	-	-
(C192) Mercedes-AMG GT 63 4MATIC+ Premium Plus RWM+DFB	Coupé	Petrol	319	37%	1972	14	20.2	-	-	-	-	-	-	-
(C192) Mercedes-AMG GT 63 4MATIC+ Premium Plus RWM+P20+DFB	Coupé	Petrol	319	37%	1974	14	20.2	-	-	-	-	-	-	-
(C192) Mercedes-AMG GT 63 4MATIC+ Premium Plus RWM+DPU (55/63)+DFB	Coupé	Petrol	319	37%	1952	14	20.2	-	-	-	-	-	-	-
(C192) Mercedes-AMG GT 63 4MATIC+ Premium Plus RWM+P20+DPU (55/63)+DFB	Coupé	Petrol	319	37%	1953	14	20.2	-	-	-	-	-	-	-
AMG GT 63 S E PERFORMANCE														
(C192) Mercedes-AMG GT 63 S E Performance Premium Plus	Coupé	Plug-in Hybrid	241	16%	2216	12.3	23	10.6	26.7	372	11	7	11	7
(C192) Mercedes-AMG GT 63 S E Performance Premium Plus P20	Coupé	Plug-in Hybrid	241	16%	2218	12.3	23	10.6	26.7	372	11	7	11	7
(C192) Mercedes-AMG GT 63 S E Performance Premium Plus DPU (e Performance)	Coupé	Plug-in Hybrid	241	16%	2218	12.3	23	10.6	26.7	372	11	7	11	7

Figures shown are for comparability purposes; only compare with other vehicles tested to the same technical procedures. Figures may not reflect real-life driving results, which depend on factory-fitted options, accessories fitted after registration, weather, driving style and vehicle load. Further information about the test used to establish fuel consumption and CO_2 figures can be found at https://www.mercedes-benz.co.uk/WLTP

Figures shown are for comparability purposes; only compare with other vehicles tested to the same technical procedures. Fuel consumption, CO_2, energy consumption and electric range figures are determined in accordance with WLTP. Actual results, including electric range, may vary depending on factors including battery charge, factory-fitted options, accessories fitted after registration, weather, driving style and vehicle load. Further information can be found at https://www.mercedes-benz.co.uk/WLTP

Technical Data

AMG GT Coupé															
Model Variant	Bodyshell	Fuel	WLTP CO2 Combined (g/km)	BIK Tax Rate	Kerb Weight (KG)	Combined (l/100km)	Combined (MPG)	W.Combined (l/100)	W.Combined (MPG)	Energy Consumption Combined (Wh/km)	EAER Electric Range KM	EAER Electric Range MILES	EAER City Range Combined KM	EAER City Range Combined MILES
AMG GT 63 S E PERFORMANCE														
(C192) Mercedes-AMG GT 63 S E Performance Premium Plus P20+DPU (e Performance)	Coupé	Plug-in Hybrid	241	16%	2219	12.3	23	10.6	26.7	372	11	7	11	7
(C192) Mercedes-AMG GT 63 S E Performance Premium Plus RWI	Coupé	Plug-in Hybrid	241	16%	2216	12.3	23	10.6	26.7	372	11	7	11	7
(C192) Mercedes-AMG GT 63 S E Performance Premium Plus RWI+P20	Coupé	Plug-in Hybrid	241	16%	2218	12.3	23	10.6	26.7	372	11	7	11	7
(C192) Mercedes-AMG GT 63 S E Performance Premium Plus RWI+DPU (e Performance)	Coupé	Plug-in Hybrid	241	16%	2218	12.3	23	10.6	26.7	372	11	7	11	7
(C192) Mercedes-AMG GT 63 S E Performance Premium Plus RWI+P20+DPU (e Performance)	Coupé	Plug-in Hybrid	241	16%	2219	12.3	23	10.6	26.7	372	11	7	11	7
(C192) Mercedes-AMG GT 63 S E Performance Premium Plus RWL (Premium Plus)	Coupé	Plug-in Hybrid	241	16%	2208	12.3	23	10.6	26.7	372	11	7	11	7
(C192) Mercedes-AMG GT 63 S E Performance Premium Plus RWL (Premium Plus)+P20	Coupé	Plug-in Hybrid	241	16%	2210	12.3	23	10.6	26.7	372	11	7	11	7
(C192) Mercedes-AMG GT 63 S E Performance Premium Plus RWL (Premium Plus)+DPU (e Performance)	Coupé	Plug-in Hybrid	241	16%	2210	12.3	23	10.6	26.7	372	11	7	11	7
(C192) Mercedes-AMG GT 63 S E Performance Premium Plus RWL (Premium Plus)+P20+DPU (e Performance)	Coupé	Plug-in Hybrid	241	16%	2212	12.3	23	10.6	26.7	372	11	7	11	7
(C192) Mercedes-AMG GT 63 S E Performance Premium Plus RWD (Premium Plus)	Coupé	Plug-in Hybrid	241	16%	2212	12.3	23	10.6	26.7	372	11	7	11	7
(C192) Mercedes-AMG GT 63 S E Performance Premium Plus RWD (Premium Plus)+P20	Coupé	Plug-in Hybrid	241	16%	2221	12.3	23	10.6	26.7	372	11	7	11	7
(C192) Mercedes-AMG GT 63 S E Performance Premium Plus RWD (Premium Plus)+DPU (e Performance)	Coupé	Plug-in Hybrid	241	16%	2221	12.3	23	10.6	26.7	372	11	7	11	7
(C192) Mercedes-AMG GT 63 S E Performance Premium Plus RWD (Premium Plus)+P20+DPU (e Performance)	Coupé	Plug-in Hybrid	241	16%	2223	12.3	23	10.6	26.7	372	11	7	11	7
(C192) Mercedes-AMG GT 63 S E Performance Premium Plus RWE (Premium Plus)	Coupé	Plug-in Hybrid	241	16%	2219	12.3	23	10.6	26.7	372	11	7	11	7
(C192) Mercedes-AMG GT 63 S E Performance Premium Plus RWE (Premium Plus)+P20	Coupé	Plug-in Hybrid	241	16%	2221	12.3	23	10.6	26.7	372	11	7	11	7
(C192) Mercedes-AMG GT 63 S E Performance Premium Plus RWE (Premium Plus)+DPU (e Performance)	Coupé	Plug-in Hybrid	241	16%	2221	12.3	23	10.6	26.7	372	11	7	11	7
(C192) Mercedes-AMG GT 63 S E Performance Premium Plus RWE (Premium Plus)+P20+DPU (e Performance)	Coupé	Plug-in Hybrid	241	16%	2223	12.3	23	10.6	26.7	372	11	7	11	7
(C192) Mercedes-AMG GT 63 S E Performance Premium Plus RWM	Coupé	Plug-in Hybrid	241	16%	2208	12.3	23	10.6	26.7	372	11	7	11	7
(C192) Mercedes-AMG GT 63 S E Performance Premium Plus RWM+P20	Coupé	Plug-in Hybrid	241	16%	2210	12.3	23	10.6	26.7	372	11	7	11	7
(C192) Mercedes-AMG GT 63 S E Performance Premium Plus RWM+DPU (e Performance)	Coupé	Plug-in Hybrid	241	16%	2210	12.3	23	10.6	26.7	372	11	7	11	7
(C192) Mercedes-AMG GT 63 S E Performance Premium Plus RWM+P20+DPU (e Performance)	Coupé	Plug-in Hybrid	241	16%	2212	12.3	23	10.6	26.7	372	11	7	11	7
(C192) Mercedes-AMG GT 63 S E Performance Premium Plus DFB	Coupé	Plug-in Hybrid	241	16%	2210	12.3	23	10.6	26.7	372	11	7	11	7
(C192) Mercedes-AMG GT 63 S E Performance Premium Plus P20+DFB	Coupé	Plug-in Hybrid	241	16%	2211	12.3	23	10.6	26.7	372	11	7	11	7
(C192) Mercedes-AMG GT 63 S E Performance Premium Plus DPU (e Performance)+DFB	Coupé	Plug-in Hybrid	241	16%	2212	12.3	23	10.6	26.7	372	11	7	11	7
(C192) Mercedes-AMG GT 63 S E Performance Premium Plus P20+DPU (e Performance)+DFB	Coupé	Plug-in Hybrid	241	16%	2213	12.3	23	10.6	26.7	372	11	7	11	7
(C192) Mercedes-AMG GT 63 S E Performance Premium Plus RWI+DFB	Coupé	Plug-in Hybrid	241	16%	2210	12.3	23	10.6	26.7	372	11	7	11	7
(C192) Mercedes-AMG GT 63 S E Performance Premium Plus RWI+P20+DFB	Coupé	Plug-in Hybrid	241	16%	2211	12.3	23	10.6	26.7	372	11	7	11	7
(C192) Mercedes-AMG GT 63 S E Performance Premium Plus RWI+DPU (e Performance)+DFB	Coupé	Plug-in Hybrid	241	16%	2212	12.3	23	10.6	26.7	372	11	7	11	7
(C192) Mercedes-AMG GT 63 S E Performance Premium Plus RWI+P20+DPU (e Performance)+DFB	Coupé	Plug-in Hybrid	241	16%	2213	12.3	23	10.6	26.7	372	11	7	11	7
(C192) Mercedes-AMG GT 63 S E Performance Premium Plus RWL (Premium Plus)+DFB	Coupé	Plug-in Hybrid	241	16%	2202	12.3	23	10.6	26.7	372	11	7	11	7
(C192) Mercedes-AMG GT 63 S E Performance Premium Plus RWL (Premium Plus)+P20+DFB	Coupé	Plug-in Hybrid	241	16%	2204	12.3	23	10.6	26.7	372	11	7	11	7
(C192) Mercedes-AMG GT 63 S E Performance Premium Plus RWL (Premium Plus)+DPU (e Performance)+DFB	Coupé	Plug-in Hybrid	241	16%	2204	12.3	23	10.6	26.7	372	11	7	11	7
(C192) Mercedes-AMG GT 63 S E Performance Premium Plus RWL (Premium Plus)+P20+DPU (e Performance)+DFB	Coupé	Plug-in Hybrid	241	16%	2206	12.3	23	10.6	26.7	372	11	7	11	7
(C192) Mercedes-AMG GT 63 S E Performance Premium Plus RWD (Premium Plus)+DFB	Coupé	Plug-in Hybrid	241	16%	2213	12.3	23	10.6	26.7	372	11	7	11	7
(C192) Mercedes-AMG GT 63 S E Performance Premium Plus RWD (Premium Plus)+P20+DFB	Coupé	Plug-in Hybrid	241	16%	2215	12.3	23	10.6	26.7	372	11	7	11	7
(C192) Mercedes-AMG GT 63 S E Performance Premium Plus RWD (Premium Plus)+DPU (e Performance)+DFB	Coupé	Plug-in Hybrid	241	16%	2215	12.3	23	10.6	26.7	372	11	7	11	7
(C192) Mercedes-AMG GT 63 S E Performance Premium Plus RWD (Premium Plus)+P20+DPU (e Performance)+DFB	Coupé	Plug-in Hybrid	241	16%	2216	12.3	23	10.6	26.7	372	11	7	11	7

Figures shown are for comparability purposes; only compare with other vehicles tested to the same technical procedures. Figures may not reflect real-life driving results, which depend on factory-fitted options, accessories fitted after registration, weather, driving style and vehicle load. Further information about the test used to establish fuel consumption and CO_2 figures can be found at https://www.mercedes-benz.co.uk/WLTP

Figures shown are for comparability purposes; only compare with other vehicles tested to the same technical procedures. Fuel consumption, CO_2, energy consumption and electric range figures are determined in accordance with WLTP. Actual results, including electric range, may vary depending on factors including battery charge, factory-fitted options, accessories fitted after registration, weather, driving style and vehicle load. Further information can be found at https://www.mercedes-benz.co.uk/WLTP

Technical Data

AMG GT Coupé															
Model Variant	**Bodyshell**	**Fuel**	**WLTP CO2 Combined (g/km)**	**BIK Tax Rate**	**Kerb Weight (KG)**	**Combined (l/100km)**	**Combined (MPG)**	**W.Combined (l/100)**	**W.Combined (MPG)**	**Energy Consumption Combined (Wh/km)**	**EAER Electric Range KM**	**EAER Electric Range MILES**	**EAER City Range Combined KM**	**EAER City Range Combined MILES**
AMG GT 63 S E PERFORMANCE														
(C192) Mercedes-AMG GT 63 S E Performance Premium Plus RWE (Premium Plus)+DFB	Coupé	Plug-in Hybrid	241	16%	2213	12.3	23	10.6	26.7	372	11	7	11	7
(C192) Mercedes-AMG GT 63 S E Performance Premium Plus RWE (Premium Plus)+P20+DFB	Coupé	Plug-in Hybrid	241	16%	2215	12.3	23	10.6	26.7	372	11	7	11	7
(C192) Mercedes-AMG GT 63 S E Performance Premium Plus RWE (Premium Plus)+DPU (e Performance)+DFB	Coupé	Plug-in Hybrid	241	16%	2215	12.3	23	10.6	26.7	372	11	7	11	7
(C192) Mercedes-AMG GT 63 S E Performance Premium Plus RWE (Premium Plus)+P20+DPU (e Performance)+DFB	Coupé	Plug-in Hybrid	241	16%	2216	12.3	23	10.6	26.7	372	11	7	11	7
(C192) Mercedes-AMG GT 63 S E Performance Premium Plus RWM+DFB	Coupé	Plug-in Hybrid	241	16%	2202	12.3	23	10.6	26.7	372	11	7	11	7
(C192) Mercedes-AMG GT 63 S E Performance Premium Plus RWM+P20+DFB	Coupé	Plug-in Hybrid	241	16%	2204	12.3	23	10.6	26.7	372	11	7	11	7
(C192) Mercedes-AMG GT 63 S E Performance Premium Plus RWM+DPU (e Performance)+DFB	Coupé	Plug-in Hybrid	241	16%	2204	12.3	23	10.6	26.7	372	11	7	11	7
(C192) Mercedes-AMG GT 63 S E Performance Premium Plus RWM+P20+DPU (e Performance)+DFB	Coupé	Plug-in Hybrid	241	16%	2206	12.3	23	10.6	26.7	372	11	7	11	7
AMG GT 63 PRO 4MATIC+														
(C192) Mercedes-AMG GT 63 PRO 4MATIC+ Coupé	Coupé	Petrol	319	37%	1975	14	20.2	-	-	-	-	-	-	-
(C192) Mercedes-AMG GT 63 PRO 4MATIC+ Coupé R03	Coupé	Petrol	319	37%	1975	14	20.2	-	-	-	-	-	-	-
(C192) Mercedes-AMG GT 63 PRO 4MATIC+ Coupé P20	Coupé	Petrol	319	37%	1977	14	20.2	-	-	-	-	-	-	-
(C192) Mercedes-AMG GT 63 PRO 4MATIC+ Coupé R03+P20	Coupé	Petrol	319	37%	1977	14	20.2	-	-	-	-	-	-	-
(C192) Mercedes-AMG GT 63 PRO 4MATIC+ Coupé RWL (PRO)	Coupé	Petrol	319	37%	1975	14	20.2	-	-	-	-	-	-	-
(C192) Mercedes-AMG GT 63 PRO 4MATIC+ Coupé RWL (PRO)+R03	Coupé	Petrol	319	37%	1975	14	20.2	-	-	-	-	-	-	-
(C192) Mercedes-AMG GT 63 PRO 4MATIC+ Coupé RWL (PRO)+P20	Coupé	Petrol	319	37%	1977	14	20.2	-	-	-	-	-	-	-
(C192) Mercedes-AMG GT 63 PRO 4MATIC+ Coupé RWL (PRO)+R03+P20	Coupé	Petrol	319	37%	1977	14	20.2	-	-	-	-	-	-	-
(C192) Mercedes-AMG GT 63 PRO 4MATIC+ Coupé DFB	Coupé	Petrol	319	37%	1969	14	20.2	-	-	-	-	-	-	-
(C192) Mercedes-AMG GT 63 PRO 4MATIC+ Coupé R03+DFB	Coupé	Petrol	319	37%	1969	14	20.2	-	-	-	-	-	-	-
(C192) Mercedes-AMG GT 63 PRO 4MATIC+ Coupé P20+DFB	Coupé	Petrol	319	37%	1971	14	20.2	-	-	-	-	-	-	-
(C192) Mercedes-AMG GT 63 PRO 4MATIC+ Coupé R03+P20+DFB	Coupé	Petrol	319	37%	1971	14	20.2	-	-	-	-	-	-	-
(C192) Mercedes-AMG GT 63 PRO 4MATIC+ Coupé RWL (PRO)+DFB	Coupé	Petrol	319	37%	1969	14	20.2	-	-	-	-	-	-	-
(C192) Mercedes-AMG GT 63 PRO 4MATIC+ Coupé RWL (PRO)+R03+DFB	Coupé	Petrol	319	37%	1969	14	20.2	-	-	-	-	-	-	-
(C192) Mercedes-AMG GT 63 PRO 4MATIC+ Coupé RWL (PRO)+P20+DFB	Coupé	Petrol	319	37%	1971	14	20.2	-	-	-	-	-	-	-
(C192) Mercedes-AMG GT 63 PRO 4MATIC+ Coupé RWL (PRO)+R03+P20+DFB	Coupé	Petrol	319	37%	1971	14	20.2	-	-	-	-	-	-	-

Figures shown are for comparability purposes; only compare with other vehicles tested to the same technical procedures. Figures may not reflect real-life driving results, which depend on factory-fitted options, accessories fitted after registration, weather, driving style and vehicle load. Further information about the test used to establish fuel consumption and CO_2 figures can be found at https://www.mercedes-benz.co.uk/WLTP

Figures shown are for comparability purposes; only compare with other vehicles tested to the same technical procedures. Fuel consumption, CO_2, energy consumption and electric range figures are determined in accordance with WLTP. Actual results, including electric range, may vary depending on factors including battery charge, factory-fitted options, accessories fitted after registration, weather, driving style and vehicle load. Further information can be found at https://www.mercedes-benz.co.uk/WLTP



Effective from June 2026 production. Information correct at time of publication 17.11.2026. Prices and specifications are subject to change without prior notice.

Mercedes-Benz UK Limited, Delaware Drive, Tongwell, Milton Keynes, MK15 8BA. Company number: 02448457