

The new CLE Coupé

Effective from November 2023 Production.

Mercedes-Benz













Some of the model features, optional extras and colours shown may not be available, or may only be available in a different specification, or at a different price.



Some of the model features, optional extras and colours shown may not be available, or may only be available in a different specification, or at a different price.



Some of the model features, optional extras and colours shown may not be available, or may only be available in a different specification, or at a different price.









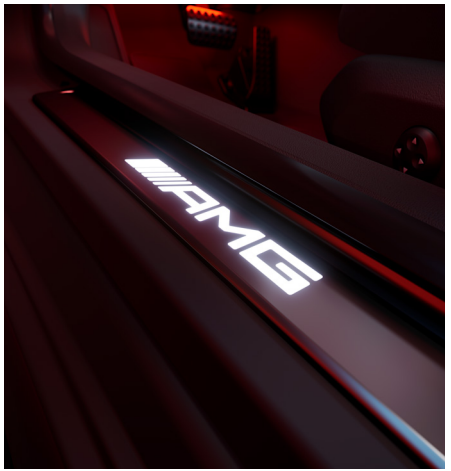



Some of the model features, optional extras and colours shown may not be available, or may only be available in a different specification, or at a different price.



Some of the model features, optional extras and colours shown may not be available, or may only be available in a different specification, or at a different price.



Some of the model features, optional extras and colours shown may not be available, or may only be available in a different specification, or at a different price.



Some of the model features, optional extras and colours shown may not be available, or may only be available in a different specification, or at a different price.



CLE

Technology

DIGITAL LIGHT High-definition headlamps with innovative features

● Standard – Not available

The new innovative DIGITAL LIGHT headlamps works like a projector with more than one million pixels per headlamp and responds with brilliant light to changing traffic, road or weather conditions. Its ULTRA RANGE Highbeam with 650 m makes you feel like driving at daylight. DIGITAL LIGHT is also able to provide assistance in the form of messages on the road in front of you.[1]

[1]This additional function depends on local road traffic laws

Model line	DIGITAL LIGHT
AMG Line	–
AMG Line Premium	●
AMG Line Premium Plus	●
Premier Edition	●
All Mercedes-AMG CLE 53 variants	●





Mercedes-Benz User Experience (MBUX)

Transforming the in-car user experience, thanks to MBUX: Controlled via voice or touch input, the innovative infotainment system can over time even predict personal habits thanks to artificial intelligence.



Voice control

- Activated by the keywords “Hey Mercedes”, the new intelligent voice control LINGUATRONIC[1] lets you control many of the infotainment functions, including destination input, phone calls or music selection
- MBUX is able to understand different accents and will adjust to you over time
- MBUX even understands indirect commands. Feeling chilly? Just say “I feel cold” and MBUX will adjust the temperature for you

Personalisation

- Turn the new CLE into your very own Mercedes-Benz by personalising driving modes, radio stations and much more
- Your personal settings can be saved in up to seven different profiles, making your driving experience the best one possible
- Thanks to artificial intelligence, MBUX is able to learn and adapt over time. It will be able to predict your personal habits, such as navigation for frequently-driven routes, or the radio station you like to listen to on your way home from work

Touch inputs

- Beside voice control you can operate MBUX via touchscreen as well as touch control buttons on the steering wheel

Maintenance and service

- Wondering when the next service is due? Or how much further you can drive until you need to stop at a petrol station? Just ask your MBUX – it will tell you the answer

The connection of the communication module to the mobile phone network including the emergency call system depends on the respective network coverage and availability of network providers

[1]LINGUATRONIC off-board functions are currently only available for three years

Mercedes me connect Stay connected any time, anywhere.

Mercedes me

Mercedes me is a range of innovative online services designed to enhance your Mercedes-Benz experience. Accessible via mobile, tablet or PC, Mercedes me lets you enjoy the highest standards of care and support, in a way that integrates seamlessly with your busy lifestyle.

Safety and Service – Mercedes me connect helps to keep you and your car safe

Check your car's oil level, tyre pressure and fuel from your phone so you'll be ready for every journey.



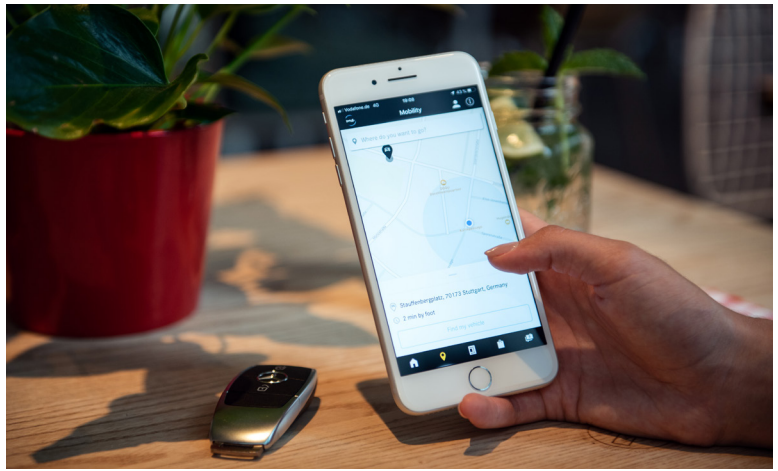

Live Traffic Information, Parked Vehicle Locator and much more with Mercedes me connect

Forgot where you've parked? Parked Vehicle Locator[1] will show you exactly where your car is as long as you're in a 1-mile radius of where you parked. Real-time traffic data and dynamic route with shorter journey times.

For more information speak to your local Mercedes-Benz Agent or visit the Mercedes me connect store at shop.mercedes-benz.com/en-gb/connect

Comfort – connect to your car anytime, anywhere

Forgot to lock your car? With Remote Car Lock[2] you will receive a notification on your smartphone to let you know. With one tap, you can lock and unlock your vehicle so you never have to worry.

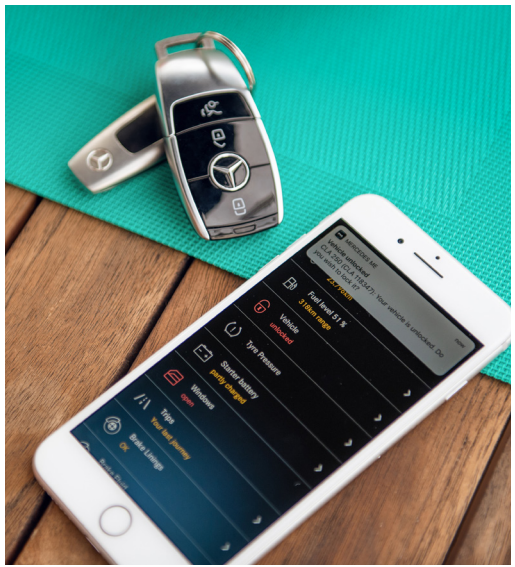

The connection of the communication module to the mobile phone network including the emergency call system depends on the respective network coverage and availability of network providers

[1]Available on all models with the Vehicle Monitoring package. This option may vary between standard and additional cost dependent on the model [2]Part of the Vehicle Status package. This option may vary between standard and additional cost dependent on the model Images shown are for illustration purposes only

CLE Model lines overview

AMG Line »



AMG Line Premium »



AMG Line Premium Plus »



Premier Edition »



AMG Line Standard equipment highlights



Option shown: spectral blue metallic (code 970)



Option shown: spectral blue metallic (code 970)

Engine, Transmission and Suspension
AGILITY CONTROL sports suspension – lowered by 15 mm
DYNAMIC SELECT with a choice of driving modes: 'Eco', 'Comfort', 'Sport', 'Sport+' and 'Individual'

OTR from **£46,605**[1]

[1]The recommended on-the-road price includes the Road Fund Licence applicable to the standard model plus delivery charge (£730.00 incl. VAT), new vehicle registration fee (£55.00), fuel (£50.00 incl. VAT), and number plates (£25.00 incl. VAT). VAT is calculated at the standard rate of 20%. Some of the model features, optional extras and colours shown may not be available, or may only be available in a different specification, or at a different price

Exterior
18" AMG alloy wheels – 5-twin-spoke design, aerodynamically optimised, painted black with a high-sheen finish (code RSK)
Ambient lighting with projection of brand logo
AMG Line exterior
Heat-insulating, dark-tinted glass
LED High-Performance headlamps with Adaptive Highbeam Assist
Mirror package – electrically-folding exterior mirrors and automatically-dimming rear-view mirror
Summer tyres





No-cost option shown: leather - macchiato beige/black (code 205A)



Ambient Lighting Premium



Memory package



Illuminated door sill panels

Safety and Assistance Systems

- Blind Spot Assist
- Parking package with reversing camera
- Traffic Sign Assist

Interior

- Ambient Lighting Premium
- AMG Line interior
- Illuminated door sill panels with 'Mercedes-Benz' lettering
- Interior Light package
- KEYLESS-GO
- Memory package
- Seats – four-way lumbar support
- Seats – heated, front
- THERMATIC automatic climate control

Communications and In-Car Entertainment

- Dashcam
- Smartphone integration[1] including Apple CarPlay® and Android Auto™
- USB package Plus
- Wireless charging[1]

[1]Compatible mobile phone required

Trim and Upholstery

Anthracite linestructure wood trim



Leather – black



AMG Line Premium Standard equipment highlights



Option shown: high-tech silver metallic (code 922)



Option shown: high-tech silver metallic (code 922)

OTR from **£50,355**[1]

Upgrade price from AMG Line £3,750

[1]The recommended on-the-road price includes the Road Fund Licence applicable to the standard model plus delivery charge (£730.00 incl. VAT), new vehicle registration fee (£55.00), fuel (£50.00 incl. VAT), and number plates (£25.00 incl. VAT). VAT is calculated at the standard rate of 20%. Some of the model features, optional extras and colours shown may not be available, or may only be available in a different specification, or at a different price

In addition to/replacement of AMG Line:

Exterior
19" AMG alloy wheels – multi-spoke design, aerodynamically optimised, painted black with a high-sheen finish (code RVA)
DIGITAL LIGHT with Adaptive Highbeam Assist Plus
KEYLESS-GO Comfort package
Panoramic sliding sunroof
Summer tyres




No-cost option shown: leather - tonka brown/black (code 204A)


No-cost option shown: leather - tonka brown/black (code 204A)


No-cost option shown: leather - tonka brown/black (code 204A)

Communications and In-Car Entertainment

MBUX augmented reality for navigation



Safety and Assistance Systems

Parking package with 360° camera

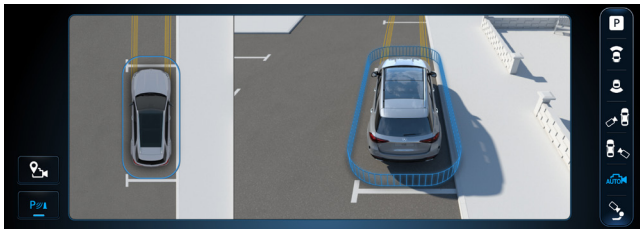

Trim and Upholstery

Anthracite linestructure wood trim



Leather – black

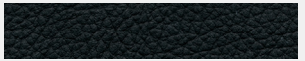

AMG Line Premium Plus Standard equipment highlights



Option shown: MANUFAKTUR alpine grey solid (code 956)



Option shown: MANUFAKTUR alpine grey solid (code 956)

OTR from **£54,355**[1]

Upgrade price from AMG Line Premium £4,000

[1]The recommended on-the-road price includes the Road Fund Licence applicable to the standard model plus delivery charge (£730.00 incl. VAT), new vehicle registration fee (£55.00), fuel (£50.00 incl. VAT), and number plates (£25.00 incl. VAT). VAT is calculated at the standard rate of 20%. Some of the model features, optional extras and colours shown may not be available, or may only be available in a different specification, or at a different price

In addition to/replacement of AMG Line Premium:

Exterior
20" AMG alloy wheels – multi-spoke design, aerodynamically optimised, painted black with a high-sheen finish (code RVM)
Summer tyres







Burmester® 3D surround sound system



ENERGIZING package Plus

Interior

AIR BALANCE package – fragrance generator, ioniser and improved filter system

ENERGIZING package Plus – heated, multicontour and climatised front seats, 7 ENERGIZING Comfort packages and ENERGIZING COACH

Seats – multi-contour and climatised, front

Communications and In-Car Entertainment

Head-up display

Burmester® 3D surround sound system with sound personalisation

Trim and Upholstery

Black open-pore aluminium lines wood trim



Leather – black



Premier Edition Standard equipment highlights



Option shown: MANUFAKTUR patagonia red metallic (code 993)

OTR from **£56,855**[1]

Upgrade price from AMG Line Premium Plus £2,500

[1]The recommended on-the-road price includes the Road Fund Licence applicable to the standard model plus delivery charge (£730.00 incl. VAT), new vehicle registration fee (£55.00), fuel (£50.00 incl. VAT), and number plates (£25.00 incl. VAT). VAT is calculated at the standard rate of 20%. Some of the model features, optional extras and colours shown may not be available, or may only be available in a different specification, or at a different price



Option shown: MANUFAKTUR patagonia red metallic (code 993)

In addition to/replacement of AMG Line Premium Plus:

Exterior
20" AMG alloy wheels – multi-spoke design, aerodynamically optimised, painted black with a high-sheen rim flange (code RVN)
Night package
Summer tyres







Interior

Heated steering wheel

Trim and Upholstery

Carbon fibre trim

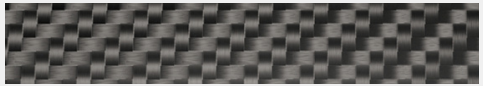

Nappa leather – black

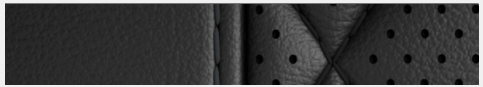



Upholstery

● Standard □ No-cost option – Not available



201A Leather[1] – black

AMG Line	●
AMG Line Premium	●
AMG Line Premium Plus	●
Premier Edition	–



204A Leather[1] – tonka brown/black

AMG Line	□
AMG Line Premium	□
AMG Line Premium Plus	□
Premier Edition	–



205A Leather[1] – macchiato beige/black

AMG Line	□
AMG Line Premium	□
AMG Line Premium Plus	□
Premier Edition	–



207A Leather[1] – power red/black

AMG Line	□
AMG Line Premium	□
AMG Line Premium Plus	□
Premier Edition	–

[1]At least 80% of the seat upholstery is pure leather, while up to 20% may consist of man-made leather

Upholstery

● Standard □ No-cost option – Not available



801A Nappa leather[1] – black

AMG Line	–
AMG Line Premium	–
AMG Line Premium Plus	–
Premier Edition	●



804A Nappa leather[1] – tonka brown/black

AMG Line	–
AMG Line Premium	–
AMG Line Premium Plus	–
Premier Edition	□

[1]100% of seat upholstery is pure leather

Model prices

Model line	Engine	Transmission	CO_2 WLTP[1]	Basic RRP excl. VAT (£)	Total RRP incl. VAT (£)	Road Fund Licence (£)[2] WLTP	Rec. OTR price (£)[3] WLTP	P11D value (£)	BiK tax rate 2023/24 (%)[2]
AMG Line									
CLE 200	Petrol – 1,999 cc, 4-cylinder, 204 hp/150 kW Mild hybrid drive – 22 hp/17 kW	9G-TRONIC PLUS 9-speed auto.	145	37,916.67	45,500.00	245.00	**46,605.00**	46,305.00	34
CLE 220 d	Diesel – 1,993 cc, 4-cylinder, 197 hp/145 kW Mild hybrid drive – 22 hp/17 kW	9G-TRONIC PLUS 9-speed auto.	123	40,000.00	48,000.00	200.00	**49,060.00**	48,805.00	29
AMG Line Premium									
CLE 200	Petrol – 1,999 cc, 4-cylinder, 204 hp/150 kW Mild hybrid drive – 22 hp/17 kW	9G-TRONIC PLUS 9-speed auto.	148	41,041.67	49,250.00	245.00	**50,355.00**	50,055.00	34
CLE 220 d	Diesel – 1,993 cc, 4-cylinder, 197 hp/145 kW Mild hybrid drive – 22 hp/17 kW	9G-TRONIC PLUS 9-speed auto.	125	43,125.00	51,750.00	200.00	**52,810.00**	52,555.00	30
CLE 300 4MATIC	Petrol – 1,999 cc, 4-cylinder, 258 hp/190 kW Mild hybrid drive – 22 hp/17 kW	9G-TRONIC PLUS 9-speed auto.	162	45,208.33	54,250.00	635.00	**55,745.00**	55,055.00	37
CLE 450 4MATIC	Petrol – 2,999 cc, 6-cylinder, 381 hp/280 kW Mild hybrid drive – 22 hp/17 kW	9G-TRONIC PLUS 9-speed auto.	176	53,645.83	64,375.00	1,030.00	**66,265.00**	65,180.00	37

[1]The indicated values were determined according to the prescribed measurement method - Worldwide Harmonised Light Vehicle Test Procedure (WLTP). Figures shown may include options which are not available in the UK. Figures shown are for comparability purposes; only compare with other cars tested to the same technical procedures. Figures may not reflect real life driving results, which will depend upon a number of factors including the starting charge of the battery, factory-fitted options, accessories fitted (post registration), variations in weather, driving styles and vehicle load. Further information about the test used to establish fuel consumption and CO_2 figures can be found at http://www.mercedes-benz.co.uk/WLTP [2]A different first year rate of Vehicle Excise Duty (Road Fund Licence) applies for new cars. Please refer to page 50 for the relevant rate for the second and subsequent years [3]The recommended on-the-road price includes the Road Fund Licence applicable to the standard model plus delivery charge (£730.00 incl. VAT), new vehicle registration fee (£55.00), fuel (£50.00 incl. VAT), and number plates (£25.00 incl. VAT). VAT is calculated at the standard rate of 20%. Some of the model features, optional extras and colours shown may not be available, or may only be available in a different specification, or at a different price

Model prices

Model line	Engine	Transmission	CO_2 WLTP[1]	Basic RRP excl. VAT (£)	Total RRP incl. VAT (£)	Road Fund Licence (£)[2] WLTP	Rec. OTR price (£)[3] WLTP	P11D value (£)	BiK tax rate 2023/24 (%)[2]
AMG Line Premium Plus									
CLE 200	Petrol – 1,999 cc, 4-cylinder, 204 hp/150 kW Mild hybrid drive – 22 hp/17 kW	9G-TRONIC PLUS 9-speed auto.	147	44,375.00	53,250.00	245.00	**54,355.00**	54,055.00	34
CLE 220 d	Diesel – 1,993 cc, 4-cylinder, 197 hp/145 kW Mild hybrid drive – 22 hp/17 kW	9G-TRONIC PLUS 9-speed auto.	125	46,458.33	55,750.00	200.00	**56,810.00**	56,555.00	30
CLE 300 4MATIC	Petrol – 1,999 cc, 4-cylinder, 258 hp/190 kW Mild hybrid drive – 22 hp/17 kW	9G-TRONIC PLUS 9-speed auto.	161	48,541.67	58,250.00	635.00	**59,745.00**	59,055.00	37
CLE 450 4MATIC	Petrol – 2,999 cc, 6-cylinder, 381 hp/280 kW Mild hybrid drive – 22 hp/17 kW	9G-TRONIC PLUS 9-speed auto.	176	56,979.17	68,375.00	1,030.00	**70,265.00**	69,180.00	37
Premier Edition									
CLE 200	Petrol – 1,999 cc, 4-cylinder, 204 hp/150 kW Mild hybrid drive – 22 hp/17 kW	9G-TRONIC PLUS 9-speed auto.	148	46,458.33	55,750.00	245.00	**56,855.00**	56,555.00	34
CLE 220 d	Diesel – 1,993 cc, 4-cylinder, 197 hp/145 kW Mild hybrid drive – 22 hp/17 kW	9G-TRONIC PLUS 9-speed auto.	126	48,541.67	58,250.00	200.00	**59,310.00**	59,055.00	30
CLE 300 4MATIC	Petrol – 1,999 cc, 4-cylinder, 258 hp/190 kW Mild hybrid drive – 22 hp/17 kW	9G-TRONIC PLUS 9-speed auto.	162	50,625.00	60,750.00	635.00	**62,245.00**	61,555.00	37
CLE 450 4MATIC	Petrol – 2,999 cc, 6-cylinder, 381 hp/280 kW Mild hybrid drive – 22 hp/17 kW	9G-TRONIC PLUS 9-speed auto.	176	59,062.50	70,875.00	1,030.00	**72,765.00**	71,680.00	37

[1]The indicated values were determined according to the prescribed measurement method - Worldwide Harmonised Light Vehicle Test Procedure (WLTP). Figures shown may include options which are not available in the UK. Figures shown are for comparability purposes; only compare with other cars tested to the same technical procedures. Figures may not reflect real life driving results, which will depend upon a number of factors including the starting charge of the battery, factory-fitted options, accessories fitted (post registration), variations in weather, driving styles and vehicle load. Further information about the test used to establish fuel consumption and CO_2 figures can be found at http://www.mercedes-benz.co.uk/WLTP [2]A different first year rate of Vehicle Excise Duty (Road Fund Licence) applies for new cars. Please refer to page 50 for the relevant rate for the second and subsequent years [3]The recommended on-the-road price includes the Road Fund Licence applicable to the standard model plus delivery charge (£730.00 incl. VAT), new vehicle registration fee (£55.00), fuel (£50.00 incl. VAT), and number plates (£25.00 incl. VAT). VAT is calculated at the standard rate of 20%. Some of the model features, optional extras and colours shown may not be available, or may only be available in a different specification, or at a different price



CLE

Mercedes-AMG

Mercedes-AMG Model lines overview

Mercedes-AMG CLE 53 4MATIC+ AMG Premium ››



Mercedes-AMG CLE 53 4MATIC+ AMG Night Edition Premium Plus ››



Mercedes-AMG CLE 53 4MATIC+ AMG Premium

Standard equipment highlights



Option shown: MANUFAKTUR alpine grey solid (code 956)



Option shown: MANUFAKTUR alpine grey solid (code 956)

Engine, Transmission and Suspension

- 9G-TRONIC PLUS 9-speed automatic transmission
- AMG RIDE CONTROL suspension
- Driving modes – AMG DYNAMIC SELECT with a choice of five driving modes (Slippery, Comfort, Sport, Sport+, Individual)

Exterior

- 20" AMG alloy wheels – Y-spoke design, aerodynamically optimised, painted matt black with a high-sheen finish (code RTM)
- AMG fuel cap
- AMG spoiler
- Brake callipers – grey painted
- DIGITAL LIGHT LED headlamps with Adaptive Highbeam Assist Plus
- Flared wheel arches
- KEYLESS-GO Comfort package
- Mercedes-AMG exterior
- Panoramic glass sliding sunroof
- Rear axle steering
- Summer tyres

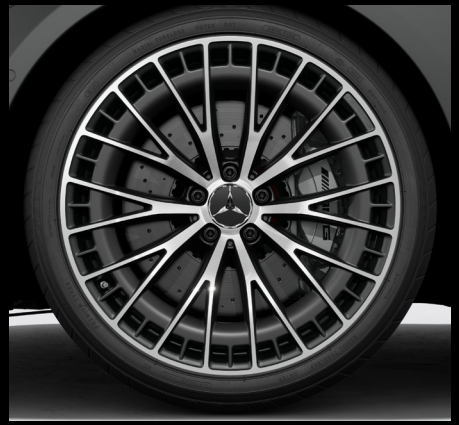

OTR from **£72,990**[1]

[1]The recommended on-the-road price includes the Road Fund Licence applicable to the standard model plus delivery charge (£730.00 incl. VAT), new vehicle registration fee (£55.00), fuel (£50.00 incl. VAT), and number plates (£25.00 incl. VAT). VAT is calculated at the standard rate of 20%. Some of the model features, optional extras and colours shown may not be available, or may only be available in a different specification, or at a different price



Interior

Floor mats – with 'AMG' lettering	Mercedes-AMG interior
Illuminated door sills with 'AMG' lettering with exchangeable cover	Steering wheel – AMG Performance steering wheel in nappa leather with AMG steering wheel buttons
Memory package	THERMATIC – automatic climate control

Communications, Safety and Assistance Systems

11.9-inch high-resolution multimedia colour display	Parking package with 360° camera
12.3-inch digital individually configurable instrument display	Traffic Sign Assist[1]
Blind Spot Assist	USB package Plus
MBUX augmented reality for navigation	

Trim and Upholstery

Black open-pore aluminium lines wood trim



AMG leather – black





[1]Our driver assistance and safety systems are aids and do not relieve you of your responsibility as the driver. Please take note of the information in the Owner's Manual and the system limits which are described therein

Mercedes-AMG CLE 53 4MATIC+ AMG Night Edition Premium Plus

Standard equipment highlights



Option shown: MANUFAKTUR graphite grey magno (code 818)


Option shown: MANUFAKTUR graphite grey magno (code 818)

Exterior
20" AMG alloy wheels – Y-spoke design, aerodynamically optimised, painted matt black with a high-sheen rim flange, (code RTN)
AMG Exterior Night package
Summer tyres



OTR from **£78,740**[1]

Upgrade price from CLE 53 4MATIC+ AMG Premium £5,750

[1]The recommended on-the-road price includes the Road Fund Licence applicable to the standard model plus delivery charge (£730.00 incl. VAT), new vehicle registration fee (£55.00), fuel (£50.00 incl. VAT), and number plates (£25.00 incl. VAT). VAT is calculated at the standard rate of 20%. Some of the model features, optional extras and colours shown may not be available, or may only be available in a different specification, or at a different price



Burmester® 3D surround sound system



Head-up display

Interior

- AIR BALANCE package – fragrance generator, ioniser and improved filter system
- ENERGIZING package Plus – heated, multicontour and climatised front seats, 7 ENERGIZING Comfort packages and ENERGIZING COACH
- Steering wheel – AMG Performance steering wheel in nappa leather/ MICROCUT microfibre with AMG steering wheel buttons

Communications, Safety and Assistance Systems

- Burmester® 3D surround sound system with sound personalisation
- Head-up display

Trim and Upholstery

Carbon fibre trim

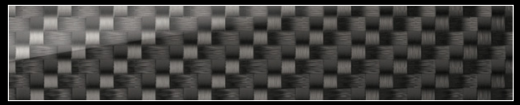

AMG leather – black

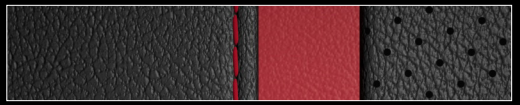

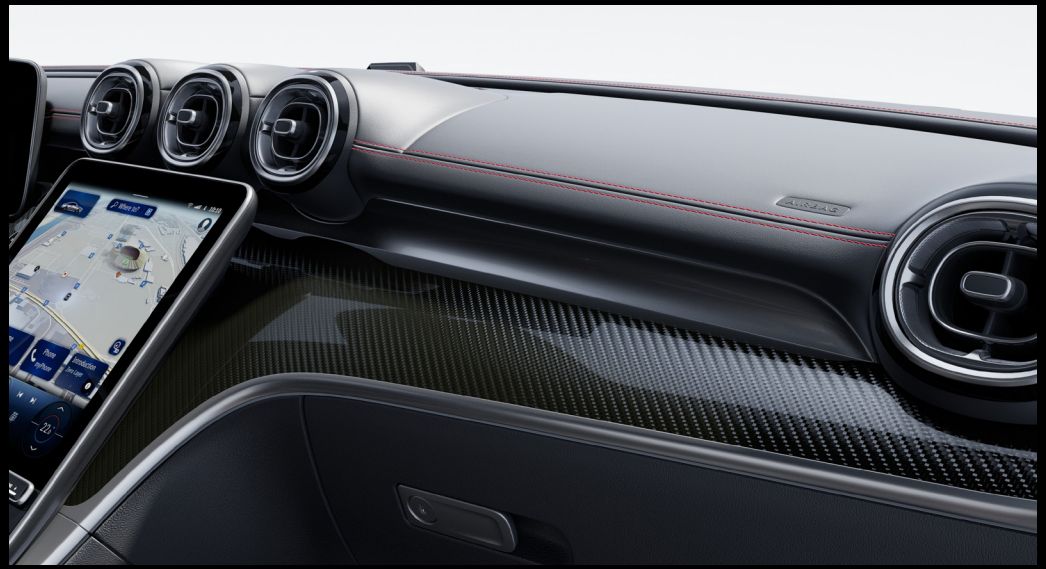



Pro Performance package

Introducing the Pro Performance package – where precision meets power – tailored for enthusiasts seeking the ultimate driving experience.

Pro Performance package (code DPP) – designed and priced as a package, including items listed on the right-hand side.

Only available for Mercedes-AMG CLE 53 4MATIC+ AMG Night Edition Premium Plus

Total incl. VAT £7,500.00







- **AMG DYNAMIC PLUS package –** AMG DYNAMIC SELECT RACE drive program 'RACE' with RACE start function and drift mode, AMG dynamic engine mounts
- **AMG Performance Seat package High-End –** AMG performance seats, electrically adjustable multicontour seats for driver and front passenger with Memory package, seat heating for driver and front passenger, 'AMG' lettering in the seat backrests, front chrome-plated trim panel with black 'AMG' lettering
- **AMG spoiler –** distinctive, progressively shaped airflow breakaway edge on the boot lid in high-gloss black
- **AMG Performance steering wheel –** in carbon fibre design/ MICROCUT microfibre with AMG steering wheel buttons
- **AMG Styling package –** AMG front apron in progressive design with side flics and air intakes in high-gloss black, AMG rear apron with diffuser panel in high-gloss black, flics in the side air outlets of the AMG rear apron in high-gloss black
- **Red-painted brake callipers –** the red-painted brake callipers with black 'AMG' lettering are an attractive eye-catching feature, and underscore the performance capabilities of your braking system



Mercedes-AMG upholstery

● Standard □ No-cost option



251A AMG leather[1] – black

CLE 53 4MATIC+ AMG Premium	●
CLE 53 4MATIC+ AMG Night Edition Premium Plus	●



Y05 Seat belts – red

CLE 53 4MATIC+ AMG Premium	□
CLE 53 4MATIC+ AMG Night Edition Premium Plus	□

[1]At least 80% of the seat upholstery is pure leather, while up to 20% may consist of man-made leather

Mercedes-AMG prices

Model line	Engine	Transmission	CO_2 WLTP[1,*]	Basic RRP excl. VAT (£)	Total RRP incl. VAT (£)	Road Fund Licence (£)[2] WLTP	Rec. OTR price (£)[3] WLTP	P11D value (£)	BiK tax rate 2023/24 (%)[2]
Mercedes-AMG CLE 53 4MATIC+ AMG Premium	Petrol – 2,999 cc, 6-cylinder, 449 hp/330 kW Mild hybrid drive – 22 hp/17 kW	9G-TRONIC PLUS 9-speed automatic	217	58,812.50	70,575.00	1,555.00	**72,990.00**	71,380.00	37
Mercedes-AMG CLE 53 4MATIC+ AMG Night Edition Premium Plus	Petrol – 1,991 cc, 6-cylinder, 449 hp/330 kW Mild hybrid drive – 22 hp/17 kW	9G-TRONIC PLUS 9-speed automatic	217	63,604.17	76,325.00	1,555.00	**78,740.00**	77,130.00	37

[1]The indicated values were determined according to the prescribed measurement method - Worldwide Harmonised Light Vehicle Test Procedure (WLTP). Figures shown may include options which are not available in the UK. *Figures shown are for comparability purposes; only compare with other cars tested to the same technical procedures. Figures may not reflect real life driving results, which will depend upon a number of factors including factory-fitted options, accessories fitted (post registration), variations in weather, driving styles and vehicle load. Further information about the test used to establish fuel consumption and CO_2 figures can be found at http://www.mercedes-benz.co.uk/WLTP [2]A different first year rate of Vehicle Excise Duty (Road Fund Licence) applies for new cars. Please refer to page 51 for the relevant rate for the second and subsequent years [3]The recommended on-the-road price includes the Road Fund Licence applicable to the standard model plus delivery charge (£730.00 incl. VAT), new vehicle registration fee (£55.00), fuel (£50.00 incl. VAT), and number plates (£25.00 incl. VAT). VAT is calculated at the standard rate of 20%. Some of the model features, optional extras and colours shown may not be available, or may only be available in a different specification, or at a different price

Become the AMG expert

Unleash a new level of performance.

Step into the world of performance and experience the AMG brand at Mercedes-Benz World – from the powerful sound of the engines to the smell of the leather to the unmistakable design of our vehicles.

Mercedes-Benz World invites all Mercedes-AMG customers to a complimentary adrenaline-packed driving experience. Feel the sensational AMG driving performance, develop your driving skills and even try your hand at power-sliding on the Wet Skid Circle. With expert one-to-one guidance from a Driving Specialist in the passenger seat, experience every inch of our Handling Circuits, Dynamic Straight and low friction surfaces.

› Click here for more information

TERMS AND CONDITIONS
The following customers only are eligible: The first purchaser/registered keeper of a newly registered Mercedes-AMG. The complimentary training must be booked and taken within 12 months of email receipt. The training is available Monday - Friday only (excluding bank holidays) and subject to availability. Upgrades are available for an additional cost, details upon request. Transferable to individuals who reside at the same postal address only. Mercedes-Benz UK Limited reserves the right to amend or withdraw this training experience. Attendees must hold a full UK driving licence. Attendees will be required to sign the Mercedes-Benz World Driving Risk Acknowledgement prior to undertaking the training experience.

The training experience is also subject to the Mercedes-Benz World Terms and Conditions, as applicable. Retailer demonstrator vehicles are not eligible.

Colour options Non-metallic and metallic

● Standard ○ Optional – Not available



149 polar white non-metallic

Mercedes-Benz variants	●
Mercedes-AMG variants	–
Total RRP incl. VAT	**-**



197 obsidian black metallic

Mercedes-Benz variants	○
Mercedes-AMG variants	○
Total RRP incl. VAT	**£715.00**



922 high-tech silver metallic

Mercedes-Benz variants	○
Mercedes-AMG variants	–
Total RRP incl. VAT	**£715.00**



040 black non-metallic

Mercedes-Benz variants	–
Mercedes-AMG variants	●
Total RRP incl. VAT	**-**



831 graphite grey metallic

Mercedes-Benz variants	○
Mercedes-AMG variants	–
Total RRP incl. VAT	**£715.00**



970 spectral blue metallic

Mercedes-Benz variants	○
Mercedes-AMG variants	○
Total RRP incl. VAT	**£715.00**

Please note that, owing to limitations of on-screen representation, paint colours may differ from those shown

Colour options MANUFAKTUR paints

○ Optional – Not available



885 MANUFAKTUR opalite white bright metallic

Mercedes-Benz variants	○
Mercedes-AMG variants	○
Total RRP incl. VAT	**£925.00**



993 MANUFAKTUR patagonia red metallic

Mercedes-Benz variants	○
Mercedes-AMG variants	○
Total RRP incl. VAT	**£925.00**



956 MANUFAKTUR alpine grey solid

Mercedes-Benz variants	○
Mercedes-AMG variants	○
Total RRP incl. VAT	**£925.00**



818 MANUFAKTUR graphite grey magno[1]

Mercedes-Benz variants	–
Mercedes-AMG variants	○
Total RRP incl. VAT	**£1,825.00**

[1]MANUFAKTUR magno matt paint finishes require extra care. Please refer to the Owner's Manual for instructions

Please note that, owing to limitations of on-screen representation, paint colours may differ from those shown

Combination options AMG Line, AMG Line Premium, AMG Line Premium Plus and Premier Edition

● Possible – Not possible

Exterior paint colours	Interior upholstery colours: AMG Line, AMG Line Premium and AMG Line Premium Plus				Premier Edition	
	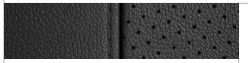 201A Leather[1] – black	 204A Leather[1] – tonka brown/black	 205A Leather[1] – macchiato beige/black	 207A Leather[1] – power red/black	 801A Nappa leather[2] – black	 804A Nappa leather[2] – tonka brown/black
 149 polar white non-metallic	●	–	–	–	●	–
 197 obsidian black metallic	●	●	●	●	●	●
 831 graphite grey metallic	●	●	●	●	●	●
 922 high-tech silver metallic	●	●	–	●	●	●
 970 spectral blue metallic	●	–	●	–	●	–
 885 MANUFAKTUR opalite white bright metallic	●	●	–	●	●	●
 956 MANUFAKTUR alpine grey solid	●	●	–	●	●	●
 993 MANUFAKTUR patagonia red	●	–	●	–	●	–

[1]At least 80% of the seat upholstery is pure leather, while up to 20% may consist of man-made leather [2]100% of seat upholstery is pure leather

Driving Assistance package Plus[1]

The Driving Assistance package Plus[1] contains a range of highly intelligent features to help you stay safe on the road – by making the drive more effortless, by warning of danger, and by taking steps to protect you in an emergency.

Driving Assistance package Plus[1] (code P20) – designed and priced as a package, including items listed below.

Only available for AMG Line Premium Plus, Premier Edition and Mercedes-AMG CLE 53 4MATIC+ AMG Night Edition Premium Plus

Total incl. VAT £1,695.00



Active Blind Spot Assist: can warn the driver of vehicles in the blind spot during a lane change and can help to avoid a collision by means of one-sided braking intervention

Active Braking Assist with cross-traffic function can help to avoid accidents with vehicles ahead, crossing traffic and also pedestrians, and/or mitigate their consequences

Active Distance Assist DISTRONIC helps maintain the desired distance from the vehicle in front with extended automatic re-start on motorways

Active Lane Change Assist supports you by bringing you into the parallel lane if there is space when changing lanes

Active Speed Limit Assist ensures detected speed limits are automatically adopted as the set speed for Active Distance Assist DISTRONIC

Evasive Steering Assist can support the driver in making evasive manoeuvres if, in a dangerous situation, he/she moves to avoid any pedestrian detected by the system

PRE-SAFE® can prepare the occupants for a side-on collision and reduce the risk of injury. Like a bodyguard, it pushes the driver or front passenger away from the danger zone towards the inside

PRE-SAFE® PLUS when a rear-end collision threatens, PRE-SAFE® PLUS can initiate preventive measures, including warning following traffic and locking the brakes on standstill

[1]Our driver assistance and safety systems are aids and do not relieve you of your responsibility as the driver. Please take note of the information in the Owner's Manual and the system limits which are described therein

Standard equipment

● Standard – Not available

Engine, Transmission and Suspension	AMG Line	AMG Line Premium	AMG Line Premium Plus	Premier Edition
9G-TRONIC PLUS 9-speed automatic transmission	●	●	●	●
AGILITY CONTROL sports suspension – lowered by 15 mm	●	●	●	●
DYNAMIC SELECT with a choice of driving modes (Comfort, ECO, Sport, Sport+, Individual)	●	●	●	●
Integrated Starter Generator Generation 2	●	●	●	●

Exterior	AMG Line	AMG Line Premium	AMG Line Premium Plus	Premier Edition
Ambient lighting with projection of brand logo	●	●	●	●
AMG Line exterior	●	●	●	●
Braking system with larger brake discs on front axle	●	●	●	●
Fuel tank – 66-litres	●	●	●	●
Headlamps – DIGITAL LIGHT with Adaptive Highbeam Assist Plus	–	●	●	●
Headlamps – LED High-Performance headlamps with Adaptive Highbeam Assist	●	–	–	–
Heat-insulating, dark-tinted glass	●	●	●	●
KEYLESS-GO Comfort package – including HANDS-FREE ACCESS, boot lid convenience closing, KEYLESS-GO access and drive authorisation system, KEYLESS-GO starting function, an electronic vehicle key which communicates with the vehicle within a range of two metres from the respective door, door handles with chrome inserts, remote boot closing and EASY-PACK tailgate	–	●	●	●
Mirror package – electrically-folding exterior mirrors and automatically-dimming rear-view mirror	●	●	●	●
Night package	–	–	–	●
Panoramic sliding sunroof	–	●	●	●
Sporty engine sound	●	●	●	●
Windcreen wipers with rain sensor	●	●	●	●

Interior	AMG Line	AMG Line Premium	AMG Line Premium Plus	Premier Edition
AIR BALANCE package – fragrance generator, ioniser and improved filter system	–	–	●	●
Ambient Lighting Premium	●	●	●	●
AMG floor mats	●	●	●	●
AMG Line interior	●	●	●	●
Belt feeder	●	●	●	●
ENERGIZING package Plus – heated, multi-contour and climatised front seats, seven ENERGIZING Comfort packages and ENERGIZING COACH	–	–	●	●
Illuminated door sill panels with ‘Mercedes-Benz’ lettering	●	●	●	●
Interior Light package	●	●	●	●
KEYLESS-GO	●	●	●	●
KEYLESS-GO starting function	●	●	●	●
Seats – folding backrests, rear	●	●	●	●
Seats – four-way lumbar support	●	●	–	–
Seats – heated, front	●	●	●	●
Seats – Memory package – driver’s seat, front passenger seat, steering column and exterior mirrors – electrically adjustable with memory; includes electro-pneumatic four-way lumbar support and seat cushion depth adjustment (6 cm)	●	●	●	●
Seats – multi-contour and climatised, front	–	–	●	●
Stowage Space package	●	●	●	●
THERMATIC automatic climate control	●	●	●	●

Standard equipment

● Standard – Not available

	AMG Line	AMG Line Premium	AMG Line Premium Plus	Premier Edition
Wheels				
18" AMG alloy wheels – 5-twin-spoke design, aerodynamically optimised, painted black with a high-sheen finish, with 245/45 R18 tyres (front) and 275/40 R18 tyres (rear) (code RSK)	●	–	–	–
19" AMG alloy wheels – multi-spoke design, aerodynamically optimised, painted black with a high-sheen finish, with 245/40 R19 tyres (front) and 275/35 R19 tyres (rear) (code RVA)	–	●	–	–
20" AMG alloy wheels – multi-spoke design, aerodynamically optimised, painted black with a high-sheen finish, with 245/35 R20 (front) and 275/30 R20 (rear) (code RVM)	–	–	●	–
20" AMG alloy wheels – multi-spoke design, aerodynamically optimised, painted black with a high-sheen rim flange, with 245/35 R20 (front) and 275/30 R20 (rear) (code RVN)	–	–	–	●
Summer tyres	●	●	●	●
Paint, Trim and Upholstery				
Centre console – high-gloss black	–	–	–	●
Centre console – mixed fabric-look finish with metal effect	●	●	●	–
Instrument panel and beltlines in ARTICO man-made leather in nappa look	●	●	●	●
Paint – non-metallic	●	●	●	●
Roof lining – black fabric	●	●	●	●
Trim – AMG carbon fibre	–	–	–	●
Trim – anthracite linestructure lime wood	●	●	–	–
Trim – black open-pore aluminium line wood	–	–	●	–
Upholstery – leather	●	●	●	–
Upholstery – nappa leather	–	–	–	●

	AMG Line	AMG Line Premium	AMG Line Premium Plus	Premier Edition
Steering				
Heated steering wheel	–	–	–	●
Multifunction sport steering wheel in nappa leather	●	●	●	●
Steering column – electrically adjustable for height and reach	●	●	●	●
Safety and Assistance Systems				
Active Brake Assist[1]	●	●	●	●
Active Lane Keeping Assist[1]	●	●	●	●
Anti-theft alarm system	●	●	●	●
Blind Spot Assist[1]	●	●	●	●
Centre airbag	●	●	●	●
Evasive manoeuvre support	●	●	●	●
Fingerprint scanner	●	●	●	●
Fluorescent jacket for driver	●	●	●	●
Increased anti-theft protection	●	●	●	●
Interior monitoring system	●	●	●	●
GUARD 360° vehicle protection Plus[2]	●	●	●	●
Passive person presence reminder	●	●	●	●
Parking – Active Parking Assist[1] with PARKTRONIC	●	●	●	●
Parking – Parking package with reversing camera	●	–	–	–
Parking – Parking package with 360° camera	–	●	●	●

[1]Our driver assistance and safety systems are aids and do not relieve you of your responsibility as the driver. Please take note of the information in the Owner's Manual and the system limits which are described therein

[2]The connection of the communication module to the mobile phone network including the emergency call system depends on the respective network coverage and availability of network providers

Standard equipment

● Standard – Not available

	AMG Line	AMG Line Premium	AMG Line Premium Plus	Premier Edition
Safety and Assistance Systems (continued)				
Pedestrian protection	●	●	●	●
PRE-SAFE® system	●	●	●	●
Traffic Sign Assist[1] – traffic sign recognition including wrong-way warning function and display of posted speed limits in the instrument cluster	●	●	●	●
Tyre pressure monitoring system	●	●	●	●
Communications and In-Car Entertainment				
5G communications module[2] for the use of Mercedes me connect services	●	●	●	●
11.9-inch media display screen	●	●	●	●
12.3-inch driver display screen	●	●	●	●
Burmester® 3D surround sound with sound personalisation	–	–	●	●
DAB digital radio	●	●	●	●

	AMG Line	AMG Line Premium	AMG Line Premium Plus	Premier Edition
Dashcam	●	●	●	●
Extended MBUX functions	●	●	●	●
Fingerprint Scanner	●	●	●	●
Hard-disk navigation	●	●	●	●
Head-up display	–	–	●	●
MBUX augmented reality for navigation	–	●	●	●
MBUX multimedia system[3]	●	●	●	●
MBUX Navigation Premium[2]	●	●	●	●
Smartphone integration[4] including Apple CarPlay® and Android Auto™	●	●	●	●
USB package Plus	●	●	●	●
Wireless charging for mobile devices in the front[4]	●	●	●	●

[1]Our driver assistance and safety systems are aids and do not relieve you of your responsibility as the driver. Please take note of the information in the Owner's Manual and the system limits which are described therein [2]The connection of the communication module to the mobile phone network including the emergency call system depends on the respective network coverage and availability of network providers [3]LINGUATRONIC off-board functions are currently only available for three years [4]Compatible mobile phone required. Please check www.mercedes-benz-mobile.com for details or contact your local Mercedes-Benz Agent for further information

Standard equipment Mercedes-AMG

● Standard – Not available

Engine, Transmission and Suspension	AMG Premium	AMG Night Edition Premium Plus
9G-TRONIC PLUS 9-speed automatic transmission	●	●
AMG RIDE CONTROL suspension with adjustable damping	●	●
AMG DYNAMIC SELECT with a choice of five driving modes (Slippery, Comfort, Sport, Sport+, Individual)	●	●
Integrated Starter Generator Generation 2	●	●

Exterior	AMG Premium	AMG Night Edition Premium Plus
Ambient lighting with projection of brand logo	●	●
AMG Exterior Night package	–	●
AMG fuel cap	●	●
AMG specific radiator grille with vertical struts in high-gloss chrome and AMG logo	●	●
AMG spoiler lip	●	●
Boot lid convenience closing feature	●	●
Brake callipers – painted in grey	●	●
Flared wheel arches	●	●
Fuel tank – 66-litres	●	●
Headlamps – DIGITAL LIGHT with Adaptive Highbeam Assist Plus	●	●
Heat-insulating, dark-tinted glass	●	●
KEYLESS-GO Comfort package – including HANDS-FREE ACCESS, boot lid convenience closing, KEYLESS-GO access and drive authorisation system, KEYLESS-GO starting function, an electronic vehicle key which communicates with the vehicle within a range of two metres from the respective door, door handles with chrome inserts, remote boot closing and EASY-PACK tailgate	●	●
Mercedes-AMG exterior	●	●
Mirror package – electrically-folding exterior mirrors and automatically-dimming rear-view mirror	●	●
Panoramic glass sliding sunroof	●	●
Petrol Particulate Filter (PPF) – all petrol engines	●	●
Tail lamps – full LED	●	●
Windcreen wipers with rain sensor	●	●

Interior	AMG Premium	AMG Night Edition Premium Plus
AIR BALANCE package – fragrance generator, ioniser and improved filter system	–	●
Ambient Lighting Premium	●	●
AMG floor mats	●	●
Belt feeder	●	●
Double cup holder	●	●
ENERGIZING package Plus – heated, multi-contour and climatised front seats, seven ENERGIZING Comfort packages and ENERGIZING COACH	–	●
Illuminated door sill panels with 'AMG' lettering and with exchangeable cover	●	●
Interior Light package	●	●
Mercedes-AMG interior	●	●
Seats – folding backrests, rear	●	●
Seats – four-way lumbar support	●	●
Seats – heated, front	●	●
Seats – Memory package – driver's seat, front passenger seat, steering column and exterior mirrors – electrically adjustable with memory; includes electro-pneumatic four-way lumbar support and seat cushion depth adjustment (6 cm)	●	●
Seats – multi-contour and climatised, front	●	●
Stowage Space package	●	●
THERMATIC automatic climate control	●	●

Standard equipment Mercedes-AMG

● Standard – Not available

	AMG Premium	AMG Night Edition Premium Plus
Wheels		
20" AMG alloy wheels – Y-spoke design, aerodynamically optimised, painted matt black with a high-sheen finish, with 265/35 R 20 tyres (front) and 295/30 R 20 tyres (rear) (code RTM)	●	–
20" AMG alloy wheels – Y-spoke design, aerodynamically optimised, painted matt black with a high-sheen rim flange, with 265/35 R 20 tyres (front) and 295/30 R 20 tyres (rear) (code RTN)	–	●
Summer tyres	●	●
Paint, Trim and Upholstery		
Centre console – high-gloss black	–	●
Centre console – mixed fabric-look finish with metal effect	●	–
Instrument panel and beltlines in ARTICO man-made leather in nappa look	●	●
Paint – non-metallic	●	●
Roof lining – black fabric	●	●
Trim – AMG carbon fibre	–	●
Trim – black open-pore aluminium line wood	●	–
Upholstery – AMG leather black	●	●
Steering		
AMG Performance steering wheel in nappa leather with AMG steering wheel buttons	●	–
AMG Performance steering wheel in nappa leather/MICROCUT microfibre with AMG steering wheel buttons	–	●
Rear axle steering	●	●
Steering – Sports Direct-Steer system with speed sensitive steering	●	●

	AMG Premium	AMG Night Edition Premium Plus
Safety and Assistance Systems		
Active bonnet – pedestrian safety measure which detects an impact and raises bonnet	●	●
Active Brake Assist[1]	●	●
Active Lane Keeping Assist[1]	●	●
Adaptive brake lights	●	●
Adaptive Brake Assist with HOLD function and brake-drying function	●	●
Anti-lock braking system (ABS)	●	●
ATTENTION ASSIST – can help alert to long journey fatigue	●	●
Automatic child seat recognition sensor	●	●
Automatic front passenger airbag deactivation	●	●
Blind Spot Assist[1]	●	●
Centre airbag	●	●
Central locking with interior switch, automatic locking and crash sensor with emergency opening function	●	●
Childproof locks – manually operated for rear doors and electrically operated for rear power windows	●	●
Dual-stage airbags – driver and front passenger; sidebags in front seats; driver kneebag; pelvis bag and windowbags for driver, front passenger and rear passengers; central airbag between driver and front passenger	●	●
Electronic parking brake	●	●
Electronic Stability Programme (ESP®)	●	●
Evasive manoeuvre support	●	●
First-aid kit and warning triangle	●	●
Fluorescent jacket for driver	●	●

[1]Our driver assistance and safety systems are aids and do not relieve you of your responsibility as the driver. Please take note of the information in the Owner's Manual and the system limits which are described therein

Standard equipment Mercedes-AMG

● Standard – Not available

Safety and Assistance Systems (continued)	AMG Premium	AMG Night Edition Premium Plus
Interior monitoring system	●	●
ISOFIX child seat attachment points with top tether in rear	●	●
GUARD vehicle protection[1] (Thatcham Category 1) consisting of a break-in and anti-theft alarm system (ATA), interior monitoring and tow-away protection	●	●
Mercedes-Benz Emergency Call System	●	●
Passive person presence reminder	●	●
Parking – Active Parking Assist[2] with PARKTRONIC	●	●
Parking – Parking package with 360° camera	●	●
Pedestrian protection	●	●
PRE-SAFE® system	●	●
Seat occupancy sensor for rear seats	●	●
Service indicator ASSYST	●	●
SPEEDTRONIC cruise control with variable speed limiter	●	●
Speed Limit Assist	●	●
TIREFIT with tyre inflation compressor	●	●
Traffic Sign Assist[2]	●	●
Tyre pressure monitoring system	●	●

Communications and In-Car Entertainment	AMG Premium	AMG Night Edition Premium Plus
5G communications module[1] for the use of Mercedes me connect services	●	●
11.9-inch high-resolution multimedia colour display	●	●
12.3-inch digital individually configurable instrument display	●	●
Burmester® 3D surround sound with sound personalisation	–	●
DAB digital radio	●	●
Dashcam	●	●
Extended MBUX functions	●	●
Fingerprint Scanner	●	●
Hard-disk navigation	●	●
Head-up display	–	●
MBUX augmented reality for navigation	●	●
MBUX Navigation Premium[1]	●	●
Smartphone integration[3] including Apple CarPlay® and Android Auto™	●	●
USB package Plus	●	●
Wireless charging for mobile devices in the front[3]	●	●

[1]The connection of the communication module to the mobile phone network including the emergency call system depends on the respective network coverage and availability of network providers are described therein [2]Our driver assistance and safety systems are aids and do not relieve you of your responsibility as the driver. Please take note of the information in the Owner's Manual and the system limits which [3]Compatible mobile phone required. Please check www.mercedes-benz-mobile.com for details or contact your local Mercedes-Benz Agent for further information

Technical data

● Standard

Model		CLE 200	CLE 220 d	CLE 300 4MATIC	CLE 450 4MATIC	Mercedes-AMG CLE 53 4MATIC+
Engine						
Fuel delivery		Petrol	Diesel	Petrol	Petrol	Petrol
Total displacement	cc	1,999	1,993	1,999	2,999	2,999
Arrangement/cylinders/valves		in-line/4/16	in-line/4/16	in-line/4/16	in-line/6/24	in-line/6/24
Power[1]	hp (kW) at rpm	204 (150)/5,800	197 (145)/3,600	258 (190)/5,800	381 (280)/5,800–6,100	449 (330)/5,800–6,100
Torque[1]	Nm at rpm	320/1,600–4,000	440/1,800–2,800	400/2,000–3,200	500/1,800–5,000	560/2,200–5,000
Compression ratio		12:01	15.5:1.0	10:01	10.5:1.0	10.5:1.0
Emissions standard		Euro 6d-ISC-FCM	Euro 6d-ISC-FCM	Euro 6d-ISC-FCM	Euro 6d-ISC-FCM	EU6e (EA)
Transmission						
9G-TRONIC PLUS 9-speed automatic		●	●	●	●	●
Performance						
Acceleration 0–62 mph	sec	7.4	7.5	6.2	4.4	4.2
Top speed	mph	149	148	155	155	155
Weights and capacities						
Kerb weight[2]	kg	1,790	1,870	1,855	1,945	2,000
Perm. Gross Vehicle Weight	kg	2,265	2,345	2,330	2,400	2,420
Boot capacity – seats up	l	420	420	420	420	420
Towing capacity – unbraked/braked	kg	750/1,800	750/1,800	750/1,800	750/1,800	750/1,800
Fuel tank capacity/of which reserve	l	66/7	66/7	66/7	66/7	65/7
Turning circle	m	11.2	11.2	11.7	11.7	12.3

[1]Figures according to Directive 80/1269/EEC in the currently applicable version [2]Mass of the vehicle in running order with at least 90% full fuel tank, plus the mass of the driver (estimated by law at 75 kg), fuel and fluids, equipped with the standard equipment as specified by the manufacturer as well as, where applicable, the mass of the body, cab, trailer coupling and spare wheel(s) as well as tools. Optional extras, additional equipment and accessories can influence the weight, residual payload, rolling resistance, aerodynamics, etc., and therefore also affect the consumption/CO_2 values

Technical data

Model		CLE 200	CLE 220 d	CLE 300 4MATIC	CLE 450 4MATIC	Mercedes-AMG CLE 53 4MATIC+
Fuel consumption[3,4,5]						
Combined (consumption dependent on chosen optional equipment)	l/100 km	6.6–6.4	4.8–4.7	7.2–7.1	7.8–7.7	9.6
	mpg	42.8–44.1	58.9–60.1	39.2–39.8	36.2–36.7	29.4
Insurance						
Group rating		35E–37E	36E–38E	40E	43E	44E

Insurance ratings may vary depending on model line and specification. Please refer to http://www.thatcham.org/abigrouprating/ for further details

[3]All figures are based on a standard specification with the smallest tyre size available in the UK

[4]The choice of wheels and transmission may affect CO_2 emissions and corresponding Road Fund Licence

[5]The indicated values were determined according to the prescribed measurement method - Worldwide Harmonised Light Vehicle Test Procedure (WLTP). Figures shown may include options which are not

AMG Line

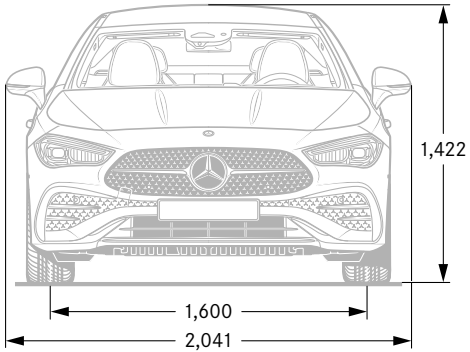

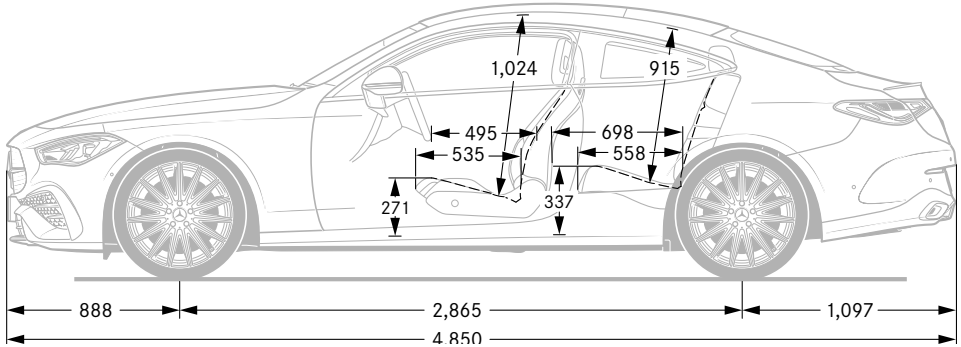

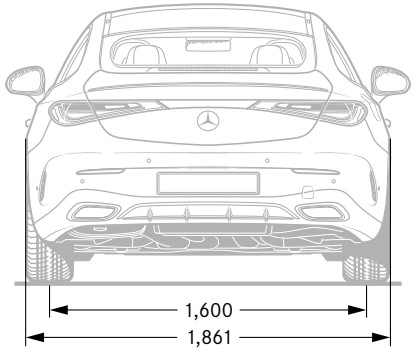

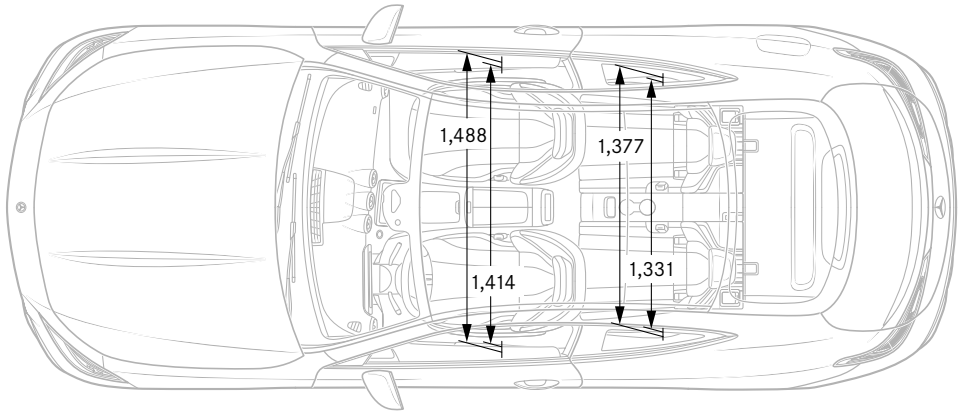

All measurements in millimetres. The dimensions shown are mean values and apply to standard-specification, unladen vehicles

Mercedes-AMG CLE 53 4MATIC+

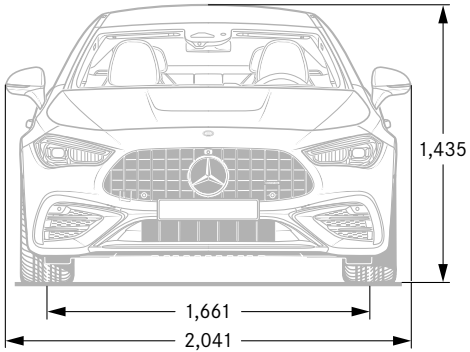

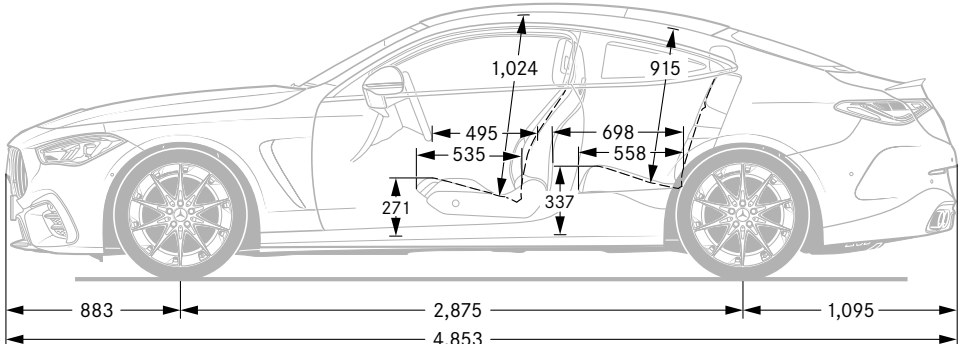

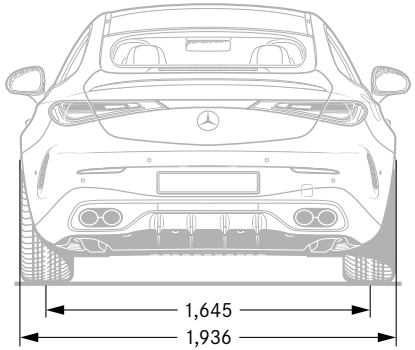

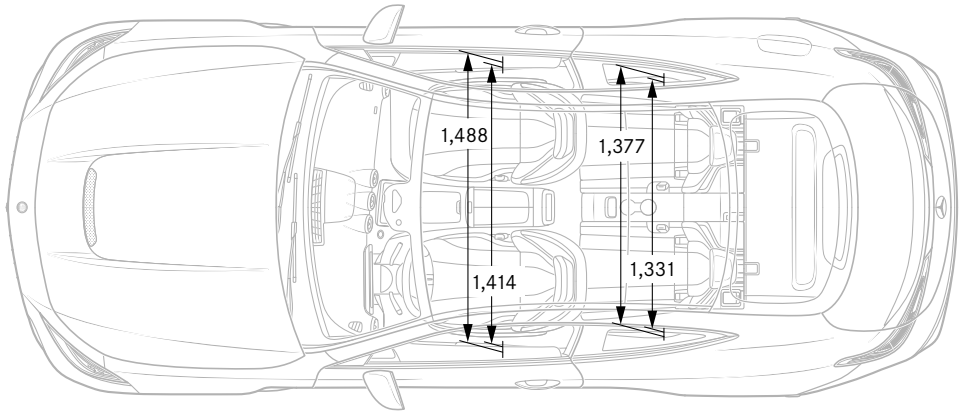

All measurements in millimetres. The dimensions shown are mean values and apply to standard-specification, unladen vehicles

Road Fund Licence

All road vehicle registrations are subject to Vehicle Excise Duty (Road Fund Licence), which varies in accordance with the vehicle's CO_2 emissions. A first year rate for each taxation band will apply. The table below shows the bands (A–M) created by the DVLA and the corresponding Road Fund Licence. CO_2 emissions and the relevant Excise Duty are shown on the model pricing pages.

				Electric vehicles		Alternative fuel vehicles		Petrol/diesel vehicles	
Band	CO_2 emissions (g/km)	First year rate petrol and RDE2 diesel (£)	First year rate alternative fuel (£)	Standard rate (£)	Premium rate (£)[1]	Standard rate (£)	Premium rate (£)[1]	Standard rate (£)	Premium rate (£)[1]
A	0	0.00	0.00	0.00	0.00	0.00	0.00	0.00	0.00
B	1 to 50	10.00	0.00	0.00	0.00	170.00	560.00	180.00	570.00
C	51 to 75	30.00	20.00	0.00	0.00	170.00	560.00	180.00	570.00
D	76 to 90	130.00	120.00	0.00	0.00	170.00	560.00	180.00	570.00
E	91 to 100	165.00	155.00	0.00	0.00	170.00	560.00	180.00	570.00
F	101 to 110	185.00	175.00	0.00	0.00	170.00	560.00	180.00	570.00
G	111 to 130	210.00	200.00	0.00	0.00	170.00	560.00	180.00	570.00
H	131 to 150	255.00	245.00	0.00	0.00	170.00	560.00	180.00	570.00
I	151 to 170	645.00	635.00	0.00	0.00	170.00	560.00	180.00	570.00
J	171 to 190	1,040.00	1,030.00	0.00	0.00	170.00	560.00	180.00	570.00
K	191 to 225	1,565.00	1,555.00	0.00	0.00	170.00	560.00	180.00	570.00
L	226 to 255	2,220.00	2,210.00	0.00	0.00	170.00	560.00	180.00	570.00
M	over 255	2,605.00	2,595.00	0.00	0.00	170.00	560.00	180.00	570.00



Some of the model features, optional extras and colours shown may not be available, or may only be available in a different specification, or at a different price
[1]Premium rate only applicable to vehicles where the list price is over £40,000 including any factory-fitted options, standard UK delivery charge and VAT

Services and insurance

Mercedes-Benz ServiceCare
We believe that servicing costs should be as flexible and affordable as possible for your new CLE, which is why we offer ServiceCare, an easy way to budget for all your servicing costs. It spreads your bills into manageable payments based on whether you have a new or used Mercedes-Benz.
With ServiceCare we guarantee the price of parts and labour for up to four services and safeguard against any further inflation. It also covers the cost of all recommended service items including brake fluid, spark plugs, air filters, fuel filters and screen wash.
You can choose either to add your servicing costs into your monthly spend or pay the full amount in a one-off payment, giving you peace of mind that they are taken care of for the period of the plan.

› Click here for more information

Warranty and breakdown cover
Every Mercedes-Benz comes with a three-year unlimited mileage warranty against manufacturing or material defects[1] and up to 30 years warranty against perforation due to corrosion from the inside out.[2] What's more, it's also covered by Mercedes-Benz Roadside Assistance – a unique package comprising up to 30 years pan-European breakdown assistance.[2]

Motor Insurance
Superb cover comes as standard. When reviewed by an independent research company, Defaqto, Mercedes-Benz Motor Insurance received a five-star rating, the highest rating available. We design our Motor Insurance specifically for Mercedes-Benz drivers.

› Get a quote



[1]Applies to vehicles sold by Mercedes-Benz in the UK to its franchised Retailers
[2]Subject to full Terms and Conditions, dependent on date of registration, available upon request
Mercedes-Benz Motor Insurance is underwritten by Aviva Insurance UK Limited. Credit provided, subject to status, by Mercedes-Benz Financial Services UK Ltd, MK15 8BA



Effective from November 2023 Production. Information correct at time of publication 23.01.2024.
Prices and specifications are subject to change without prior notice.
MBC236PL/0324 MY804

Mercedes-Benz Cars UK Limited, Tongwell, Milton Keynes, MK15 8BA. Company number 2448457 www.mercedes-benz.co.uk